NASA/CR– 20230012245

Life Cycle Cost Modeling of High-speed Commercial Aircraft - Final Report

Hayden R. Magill, John E. Bradford, Ami N. Patel, and Aaron A. Boysen
SpaceWorks Enterprises, Inc., Atlanta, Georgia

August 2023

NASA STI Program . . . in Profile

Since its founding, NASA has been dedicated to the advancement of aeronautics and space science. The NASA scientific and technical information (STI) program plays a key part in helping NASA maintain this important role.

The NASA STI program operates under the auspices of the Agency Chief Information Officer. It collects, organizes, provides for archiving, and disseminates NASA's STI. The NASA STI program provides access to the NTRS Registered and its public interface, the NASA Technical Reports Server, thus providing one of the largest collections of aeronautical and space science STI in the world. Results are published in both non-NASA channels and by NASA in the NASA STI Report Series, which includes the following report types:

- TECHNICAL PUBLICATION. Reports of completed research or a major significant phase of research that present the results of NASA Programs and include extensive data or theoretical analysis. Includes compilations of significant scientific and technical data and information deemed to be of continuing reference value. NASA counter-part of peer-reviewed formal professional papers but has less stringent limitations on manuscript length and extent of graphic presentations.

- TECHNICAL MEMORANDUM. Scientific and technical findings that are preliminary or of specialized interest, e.g., quick release reports, working papers, and bibliographies that contain minimal annotation. Does not contain extensive analysis.

- CONTRACTOR REPORT. Scientific and technical findings by NASA-sponsored contractors and grantees.

- CONFERENCE PUBLICATION. Collected papers from scientific and technical conferences, symposia, seminars, or other meetings sponsored or co-sponsored by NASA.

- SPECIAL PUBLICATION. Scientific, technical, or historical information from NASA programs, projects, and missions, often concerned with subjects having substantial public interest.

- TECHNICAL TRANSLATION. English-language translations of foreign scientific and technical material pertinent to NASA's mission.

Specialized services also include organizing and publishing research results, distributing specialized research announcements and feeds, providing information desk and personal search support, and enabling data exchange services.

For more information about the NASA STI program, see the following:

- Access the NASA STI program home page at http://www.sti.nasa.gov

NASA/CR–20230012245

Life Cycle Cost Modeling of High-speed Commercial Aircraft - Final Report

Hayden R. Magill, John E. Bradford, Ami N. Patel, and Aaron A. Boysen SpaceWorks Enterprises, Inc., Atlanta, Georgia

National Aeronautics and
Space Administration

Langley Research Center
Hampton, Virginia 23681-2199

Prepared for Langley Research Center
under Contract 80NSSC22C0008

August 2023

The use of trademarks or names of manufacturers in this report is for accurate reporting and does not constitute an official endorsement, either expressed or implied, of such products or manufacturers by the National Aeronautics and Space Administration.

Available from:

NASA STI Program / Mail Stop 148
NASA Langley Research Center
Hampton, VA 23681-2199
Fax: 757-864-6500

SpaceWorks®

Life Cycle Cost Modeling of High-speed Commercial Aircraft. Final Report

Expanded Trade Studies and Modeling

National Aeronautics and Space Administration
Aeronautics Research Mission Directorate

NASA SBIR Contract #80NSSC22C0008

August 2023

CONTENTS

Executive Summary 2

1 MIDAS 4

2 Expanded Trade Space 6

3 Tech Stops 8

4 Demand-based Mixed Fleet Analysis 15

5 Updated Market Research 23

6 Updated Alternative Fuels 34

7 Flight Scheduling 37

8 Competitive Market 40

9 Conclusions and Recommendations 50

10 Appendix 52

Executive Summary

SpaceWorks has concluded a 9-month research and development project aimed at addressing key questions in NASA's effort to anticipate, understand, and ultimately support the emerging high-speed commercial flight market. The current project is a continuation of the *Life Cycle Cost Modeling of High-Speed Commercial Aircraft*[1], which is a follow-on to a 2021 study led by Deloitte and SpaceWorks entitled *Commercial Hypersonic Transportation Market Study*[2]. Based in part on the recommendations of these prior studies, the objectives of this current effort were to expand the trade space to include Mach 1.5 aircraft and conduct additional trade studies. These included utilizing tech stops to extend serviceable range between city pairs, mixed aircraft fleets based on market size, flight scheduling to maximize value of the travel opportunity, and scenarios with multiple service operators. Additionally, SpaceWorks conducted new market surveys and research to update air passengers' willingness-to-pay for high-speed flights given the changes in macroeconomic conditions since the start of the *Commercial Hypersonic Transportation Market Study* with Deloitte. Ultimately, the new data and capability to evaluate all the trade studies were implemented in a new simulation environment called MIDAS (Multi-market Integrated Dynamic Aerospace Simulation). This sophisticated tool, implemented using AnyLogic software, utilizes agent-based and discrete event simulation (DES) techniques to provide highly detailed analysis and assessment of the high-speed aircraft market problem.

The aircraft design space explored during this effort spanned cruise Mach numbers between 1.5 and 5, a maximum un-refueled operating range between 3,500 and 7,000 nmi, passenger counts between 20 and 50, and four different fuel options (i.e., Jet-A, sustainable aviation fuel (SAF), liquified natural gas (LNG), and liquid hydrogen). To conduct rapid parametric sizing, cost estimation, and business case analysis for aircraft in this design space, SpaceWorks leveraged their internally developed Reduced Order Simulation for Evaluation of Technologies and Transportation Architectures (ROSETTA) modeling capability for the initial trade studies but transitioned to the MIDAS M&S tool as analysis requirements outgrew the capabilities of the High-Speed Commercial Aircraft (HSCA) ROSETTA model. MIDAS is now SpaceWorks' primary modeling and simulation tool for business case analyses of high-speed aircraft and is available for commercial services.

First, SpaceWorks expanded the trade space to include Mach 1.5 aircraft since results to-date indicated slower speeds generate better business cases. This proved to be true as the Mach 1.5 business cases typically resulted in the lowest ticket prices, lowest aircraft prices, highest market capture, and the most aircraft sold. Furthermore, major transpacific routes became accessible as the lower speed enabled longer range aircraft to be feasible. Additionally, NASA wanted to understand the potential of enabling short-range aircraft to address long-range routes via tech stops (i.e., quick refueling stops), enabling lower cost aircraft (due to their smaller size) while still capturing portions of the transpacific market. Although this improved the business case for aircraft, especially for higher cruise Mach number planes in the Mach 3 to 5 range, the improvement wasn't enough to outperform lower Mach aircraft flying direct. SpaceWorks recommends that tech stops should therefore still be utilized to grow the market for short-range aircraft which will make it easier for higher Mach aircraft to achieve viable business solutions.

Based on the results from the mixed fleet (i.e., an airline operator utilizing a fleet of aircraft comprised of two separate types of aircraft) analysis conducted during the base effort, it was suggested that a passenger "demand-based" analysis be conducted for fleet utilization rather than dividing addressable routes for each aircraft purely by distance. SpaceWorks analyzed solutions that utilized one aircraft type, typically short-range but higher passenger count, to address the highest demand routes within its range while the other aircraft type, typically long-range but lower passenger count, addressed all other routes within its range. This proved to be a better solution for an operator utilizing a mixed fleet, but it still faced the same issue as identified in our earlier study, namely struggling to reach sufficient production rates for both aircraft type manufacturers simultaneously due to splitting of production demand. SpaceWorks recommends industry implement a "leader-follower" approach that enables the leader aircraft to go after high demand markets first while enabling smaller routes to grow more before being addressed by a follower aircraft. The key here is ensuring market sizes and therefore production runs are large enough to satiate both airframe manufacturers.

Due to the changes in the macroeconomic environment since the *Commercial Hypersonic Transportation Market Study with Deloitte*, SpaceWorks conducted extensive market surveys through SurveyMonkey and the Global Business Travelers Association (GBTA). Following data processing, the resulting elasticity curves indicated a reduced willingness-to-pay for faster flight times compared to the same types of elasticity curves produced by Deloitte and SpaceWorks in 2020. Additional market research led to updated year-over-year passenger market growth rates (applied regionally) and a recalibration of our aircraft development cost models that resulted in increased overall aircraft development costs relative to our prior analyses. These modeling improvements were implemented in MIDAS.

As a next step, SpaceWorks reevaluated the alternative fuel business cases with the updated elasticity curves and market/cost data. As expected, business cases were notably worse compared to the original alternative fuel business cases first reported under the base effort. However, SAF outperformed Jet-A cases due to smaller captured markets early, faster growth rates, and changing fuel prices over time that resulted in SAF being cheaper than Jet-A when market sizes are more substantial. Our modeling assumption is that Jet-A prices will rise over time due to scarcity and regulation while SAF, currently in limited supply but with substantial political and financial backing to increase production, will become more readily available to the aviation industry and less expensive over time, even to the point of being less expensive than Jet-A in the out years of our models. SpaceWorks recommends continued investment in alternative fuels, specifically to ensure that supply of these fuels can meet the total expected demand.

Finally, competitive operator scenarios were analyzed to see if splitting the market between airline operators of high-speed aircraft was beneficial or detrimental to the overall business case. In this simulation, we assumed each operator will take delivery on its aircraft as quickly as possible and ramp up flights on all achievable routes to compete with the other operator, until the market is satisfied between them. Aircraft deliveries from the manufacturer are alternated between the two operators. Results indicated that reducing the upfront acquisition costs for each operator (lowering its maximum exposure and financial risk) enabled better business cases overall since the manufacturer could still maintain similar, if not better, production rates for the aircraft. In particular, a sub-scenario that considers first awarding highly dense north Atlantic "Crown Jewel" routes exclusively to one airline operator and awarding all other routes (including tech stops) exclusively to the other airline operator produced the best results for both. These results also indicated a leader-follower approach may be preferred given that Crown Jewel routes were populated with aircraft before all others. SpaceWorks recommends this approach with multiple operators to spread out the financial risk.

[1]Life Cycle Cost Modeling of High-Speed Commercial Aircraft, SpaceWorks Enterprises, Inc., 2022, https://ntrs.nasa.gov/citations/20220015464

[2]Commercial Hypersonic Transportation Market Study, Deloitte; SpaceWorks Enterprises, Inc.; National Institute of Aerospace, 2021, https://ntrs.nasa.gov/citations/20210014711

1 - MIDAS (Multi-Market Integrated Dynamic Aerospace Simulation)

OVERVIEW

Over the course of this effort, SpaceWorks has expanded its enhanced modeling and simulation tool into a detailed and flexible model for investigating supersonic and hypersonic point-to-point flight. This model, called the Multi-market Integrated Dynamic Aerospace Simulation (MIDAS), offers greater granularity and fidelity compared to the HSCA ROSETTA model. This additional granularity enables more realistic economics modeling and improved insight into the model behavior, with results available on a per annum basis. One note is that MIDAS currently only incorporates the economics modeling from the ROSETTA model, meaning aircraft sizing is a required input to MIDAS. However, aircraft sizing can be executed instantaneously (and in batches if necessary) to generate aircraft parameters for MIDAS.

MIDAS was developed using the AnyLogic platform. AnyLogic is a multi-method simulation software that enables any combination of discrete-event simulation (DES) modeling, agent-based modeling, and system dynamics modeling to be used within a simulation (see Figure 1.1). In particular, MIDAS leverages a mix of discrete-event and agent-based modeling. Throughout the base effort, results from MIDAS were benchmarked against the ROSETTA model where feasible. Results were not expected to be identical due to subtle differences in behavior modeling between the two tools, but in general were consistent with expected trends.

Figure 1.1: AnyLogic Multi-method Simulation Capabilities

METHODOLOGY

This model was architected with generality and flexibility from the forefront, and as such allows for the ability to model multiple aircraft types (e.g., short-range vs. long-range) and even multiple operators to assess various competitive scenarios. The most foundational "node" in the model consists of a route, which could have two airports (or three if tech stops are enabled) as seen in Figure 1.2. There are a possible 90 overwater routes in this model currently, covering both transatlantic and transpacific regions, and each technically and economically viable route has dedicated aircraft servicing flights daily. The model currently does not allow for repositioning aircraft between routes to help meet demand. MIDAS initializes a scenario by determining which routes receive which aircraft type (e.g., short-range or long-range) and determining how many aircraft each route needs initially, as described below.

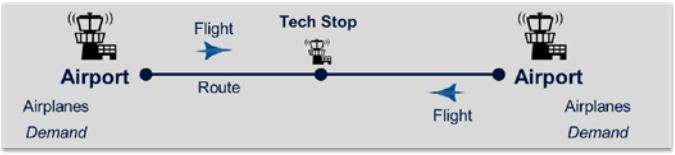

Figure 1.2: Route "Node" in MIDAS

The model initialization and operations timeline are denoted in Figure 1.3 below. When a simulation begins, MIDAS determines which aircraft type is best suited for each route, and then determines the required flights per day and the required number of aircraft per route for all viable routes based on aircraft capacity and desired load factor. A route must have at least one flight per day to be considered viable for most scenarios. The number of aircraft each route needs is determined from a route's given demand (market size). This passenger demand is allowed to grow annually in MIDAS; thus, a route's aircraft fleet can grow over time to accommodate market growth. Based on the scenario, routes are assigned to either a single or multiple operators, and the aircraft in a route are associated with an operator fleet for revenue and cost tracking. At this point, aircraft development can begin for respective airframe and engine manufacturers. For some scenarios, the second aircraft (typically long-range) has a delay period associated with it, typically 5 years.

After a specified number of years, aircraft production begins and the production rates vary throughout the model with three distinct periods: initial ramp-up, full annual production, sustained production. Each aircraft type has three categories for deliveries: military, commercial, and private/charter. In general, all military deliveries are completed prior to commercial deliveries. This is a base assumption that the military will be the anchor-buy customer and therefore, receive the first aircraft off the production line. For most scenarios, commercial aircraft are delivered based on market size, where the largest markets get all their requested aircraft first. The bulk of the execution time in MIDAS occurs during the fleet operations period. During this time, aircraft are servicing flights and retire based on accumulated flight hours. If a new aircraft is required, either due to retirement or market growth, that order is fulfilled on a "first in, first out" (FIFO) basis depending on surplus availability. The model will execute for a total period of 35 years. At the end of the simulation, business metrics such as internal rate of return (IRR), net present value (NPV), and max exposure are calculated for the operator(s) and manufacturers.

Any deviations or modifications from the above methodology have been noted in the respective scenario sections. To aid in visualization and real-time diagnostics, a series of "dashboards" have been created to display information to a user while running a simulation. Figure 1.4 below shows the main entry point to the MIDAS model, where various configuration settings can be set by the user. The toggles available allow for switching between the new or old market data (elasticity) curves, selecting the model type, and if applicable selecting the specific competitive market scenario to run. Additional toggles allow for flight scheduling and/or tech stops to be included in the simulation.

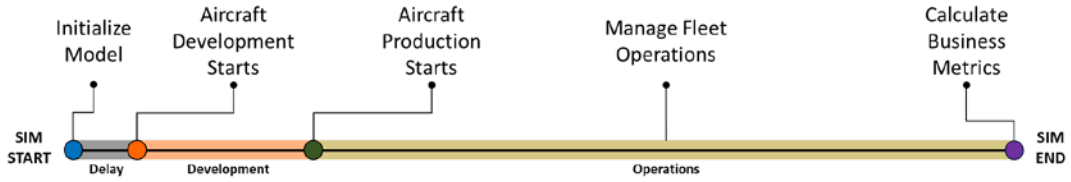

Figure 1.3: Model Operations Timeline

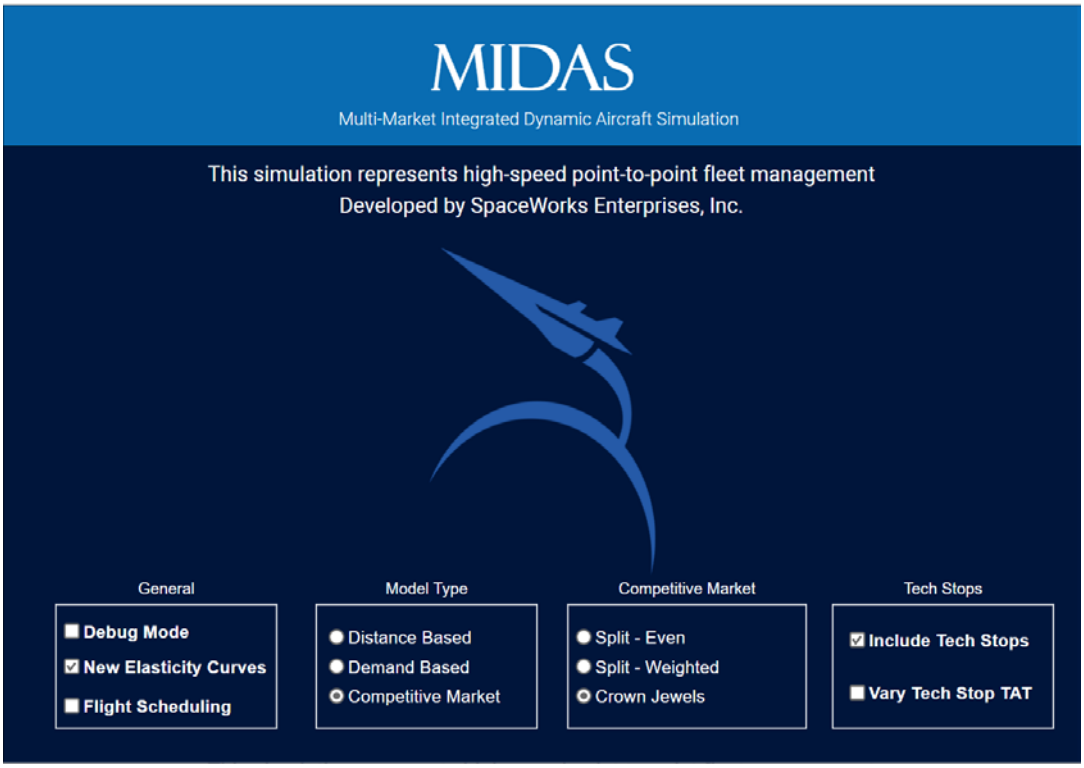

Figure 1.4: MIDAS Main Simulation Dashboard

2 - Expanded Trade Space: Mach 1.5

With several industry players, as well as NASA's QueSST team, designing supersonic aircraft between Mach 1.5 and Mach 2, SpaceWorks was tasked to expand the original trade matrix to include Mach 1.5 aircraft (Table 2.1). The underlying assumptions were unchanged from the previous effort and only required review of calculations to ensure equations were still applicable at the lower Mach regime. Sizing, performance, and cost equations were determined to still be viable at the slower design point. Additionally, the MIDAS model was reviewed to ensure consistency with calculations for Mach 1.5 as in the HSCA ROSETTA model.

Table 2.1: Mach 1.5 Trade Matrix

Case	Range (nmi)	PAX	Cruise Mach	Fuel Type
17	3,500	20	1.5	Jet-A
18	4,000			
19	4,500			
20	5,000			
21	5,400			
22	5,700			
23	6,100			
24	6,510			
25	3,500	50		
26	4,000			
27	4,500			
28	5,000			
29	5,400			
30	5,700			
31	6,100			
32	6,510			

The greatest point of uncertainty in our Mach 1.5 analysis is most likely the price elasticity calculations that are used to determine annual passenger demand on each route as a function of one-way ticket price and Mach number. Data gathered in the original Deloitte study focused on willingness-to-pay for time savings that corresponded to Mach 2, 3, 4, 5, and 6. Because of this, willingness-to-pay for times savings at Mach 1.5 weren't directly known. Therefore, an extrapolation from the existing curves was used to determine demand for a Mach 1.5 aircraft at a given ticket price.

All of the Mach 1.5 cases achieved a 25% IRR. Market capture peaked between 5,000 – 5,700 nmi (see Figure 2.1) as ticket prices stayed relatively low and additional routes became available with a greater design range. With a lower design Mach number, aircraft were less complex and were able to achieve greater design ranges and passenger capacities without becoming excessively large and expensive (Table 2.2).

With reduced acquisition and operating costs, it is easier for the operator to charge lower ticket prices and capture more demand, especially when longer routes are more feasible to address. This resulted in Mach 1.5 cases that had greater market capture than any of the Mach 2-5 business cases. Uncertainty regarding the willingness-to-pay at Mach 1.5 speeds may shift the magnitude of these results but the underlying trends remain the same. A smaller and less expensive aircraft reduces the financial risk and makes closing the business case easier for the manufacturers and operator.

Additional analysis was conducted to evaluate the impact of alternative fuels. Trends here were essentially the same as previous alternative fuel trades. SAF performed slightly worse than Jet-A due to higher fuel prices early on. LNG performed about the same as Jet-A with lower operating costs but higher upfront costs. LH2 was able to achieve successful business cases up to 4,000 nmi as the reduced speed of the aircraft meant less fuel and tank mass were needed which were reflected in sizing and cost estimating.

Although the travel time savings are not as great as with faster aircraft considered in this study, the reduction in costs across the board make Mach 1.5 aircraft the preferred solution in the near-term for high-speed flight. It offers the least amount of financial risk and enables ticket prices that are closer to what an average air passenger would be willing to pay, which by extension, increases market capture.

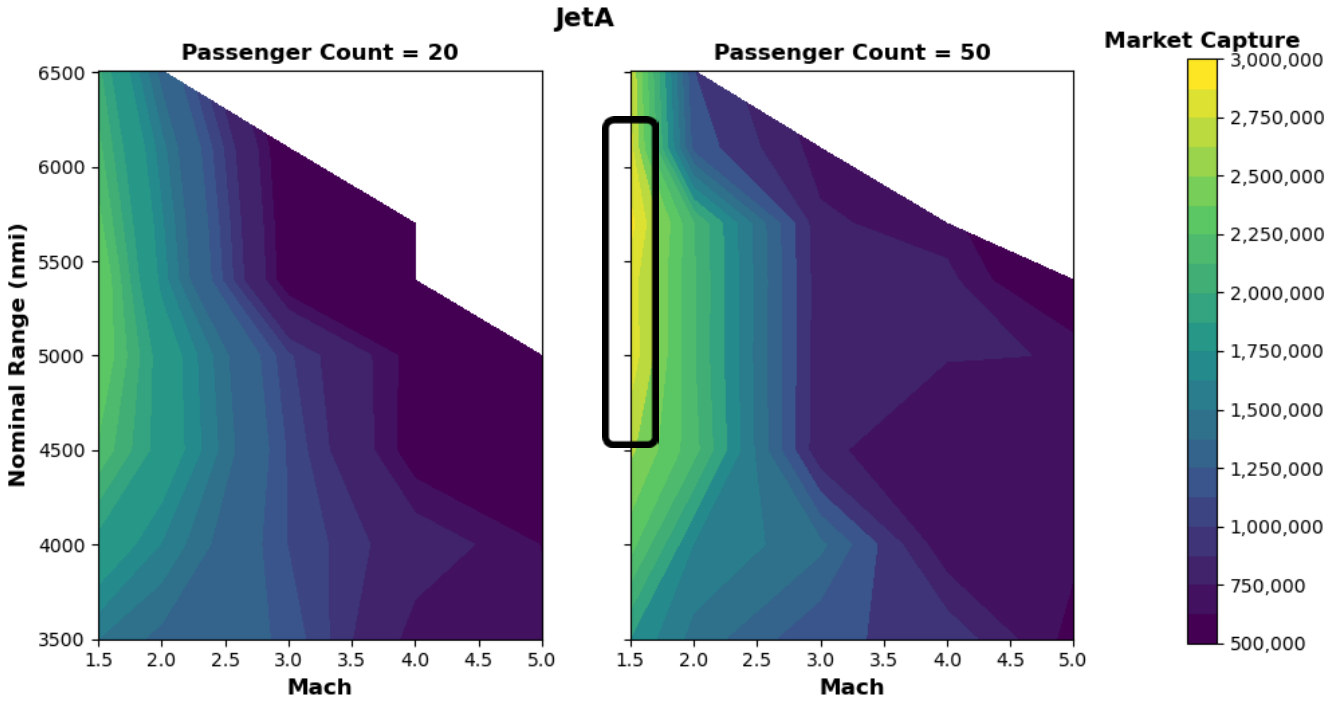

Figure 2.1: Updated contour plots for Market Capture that highlights the increased market capture realized with Mach 1.5 aircraft

Table 2.2: Mach 1.5 Trade Matrix results

Range (nmi)	Mach	Pax	Min. IRR	Ticket Price	Market Capture	Aircraft Sold	Aircraft Price	Engine Price	MTOW (lbm)	MEW (lbm)	Engine Thrust (lbf)	CO2e (kg/km/pax)
3,500	1.5	20	25.2%	$3,700	3.8%	461	$111M	$7.9M	71,000	34,400	6,700	0.33
4,000	1.5		25.0%	$3,800	4.7%	550	$105M	$7.5M	78,000	36,200	7,400	0.34
4,500	1.5		25.1%	$4,000	5.5%	647	$102M	$7.3M	87,000	38,400	8,200	0.36
5,000	1.5		25.0%	$4,400	5.8%	690	$105M	$7.5M	97,000	40,800	9,100	0.39
5,400	1.5		25.0%	$4,700	5.9%	726	$105M	$7.6M	106,000	43,100	10,000	0.41
5,700	1.5		25.2%	$5,300	5.6%	739	$112M	$8.1M	114,000	45,000	10,700	0.43
6,100	1.5		25.2%	$5,800	5.4%	739	$114M	$8.3M	126,000	47,800	11,800	0.46
6,510	1.5		25.1%	$6,400	5.1%	739	$120M	$8.7M	140,000	51,200	13,100	0.49
3,500	1.5	50	25.0%	$3,100	4.5%	246	$212M	$17.5M	126,000	58,900	11,800	0.23
4,000	1.5		25.0%	$3,000	5.8%	321	$184M	$13.3M	139,000	62,000	13,000	0.24
4,500	1.5		25.1%	$3,200	6.5%	335	$200M	$13.9M	154,000	65,600	14,400	0.26
5,000	1.5		25.0%	$3,400	7.0%	382	$193M	$13.8M	171,000	69,800	16,100	0.27
5,400	1.5		25.0%	$3,600	7.0%	393	$197M	$14.3M	187,000	73,700	17,600	0.29
5,700	1.5		25.2%	$3,800	7.3%	434	$191M	$13.8M	201,000	76,900	18,800	0.30
6,100	1.5		25.0%	$4,200	6.9%	426	$203M	$14.6M	221,000	81,800	20,800	0.32
6,510	1.5		25.0%	$4,600	6.8%	435	$213M	$15.4M	246,000	87,600	23,000	0.35

3 - Tech Stops

As the design range of an aircraft increases, it becomes economically more challenging for aircraft with higher design Mach numbers to be successful due to increased complexity and significantly larger aircraft that come with high acquisition and operating costs. In order to mitigate this while still addressing longer routes (mainly transpacific routes), SpaceWorks was tasked to evaluate the viability of "tech stop" scenarios where a short-range aircraft makes a single stop between the origin and destination to quickly refuel, making longer routes reachable. The following aircraft design parameters were considered in Table 3.1 below.

Table 3.1: Tech Stop Trade Matrix

Case	Range (nmi)	PAX	Cruise Mach	Fuel Type
33-37	3,500	20	1.5 - 5	Jet-A
38-42	3,500	50	1.5 - 5	Jet-A
43-47	4,000	20	1.5 - 5	Jet-A
48-52	4,000	50	1.5 - 5	Jet-A
53-57	4,500	20	1.5 - 5	Jet-A
58-62	4,500	50	1.5 - 5	Jet-A

In this analysis, tech stop routes were still required to be mostly overwater due to sonic boom constraints and the tech stop location(s) had to be based in the United States. Because of these criteria, two possible tech stop locations were identified: Anchorage, AK and Honolulu, HI. Furthermore, routes considered for tech stops were purely transpacific. Potential routes over the north pole after stopping in Anchorage were considered but were ultimately ruled out due to a notable amount of flight over land in Alaska and higher anticipated levels of radiation exposure while flying near the pole (see Appendix A for more information on radiation and flights over the poles). Table 3.2 and Figures 3.1 and 3.2 show the feasibility of each tech stop for a given aircraft design range. Green cells indicate a technically feasible route between any of our suggested West Coast hubs and the transpacific destination in the corresponding row with one tech stop in either Anchorage or Honolulu. For an aircraft with a design range of 4,500 nmi for example, only Singapore and Manila are out of range with the use of one tech stop, and Manila is only barely beyond this range. Neither Anchorage nor Honolulu is sufficiently positioned to capture all the desired transpacific routes for the example 4,500 nmi aircraft, so both locations are necessary to maximize route capture in our simulations.

Table 3.2: Matrix of viable tech stop routes based on aircraft design range and distance of destination from the tech stops in Anchorage, AK and Honolulu, HI

Dest.	Distance from ANC	Distance from HNL	Design Range of 3,500 nmi		Design Range of 4,000 nmi		Design Range of 4,500 nmi	
HND	3,011 nmi	3,349 nmi	ANC	HNL	ANC	HNL	ANC	HNL
ICN	3,300 nmi	3,977 nmi	ANC	HNL	ANC	HNL	ANC	HNL
PVG	3,744 nmi	4,281 nmi	ANC	HNL	ANC	HNL	ANC	HNL
TPE	4,066 nmi	4,405 nmi	ANC	HNL	ANC	HNL	ANC	HNL
HKG	4,415 nmi	4,839 nmi	ANC	HNL	ANC	HNL	ANC	HNL
MNL	4,617 nmi	4,607 nmi	ANC	HNL	ANC	HNL	ANC	HNL
SIN	5,791 nmi	5,832 nmi	ANC	HNL	ANC	HNL	ANC	HNL
AKL	6,124 nmi	3,814 nmi	ANC	HNL	ANC	HNL	ANC	HNL
SYD	6,373 nmi	4,403 nmi	ANC	HNL	ANC	HNL	ANC	HNL

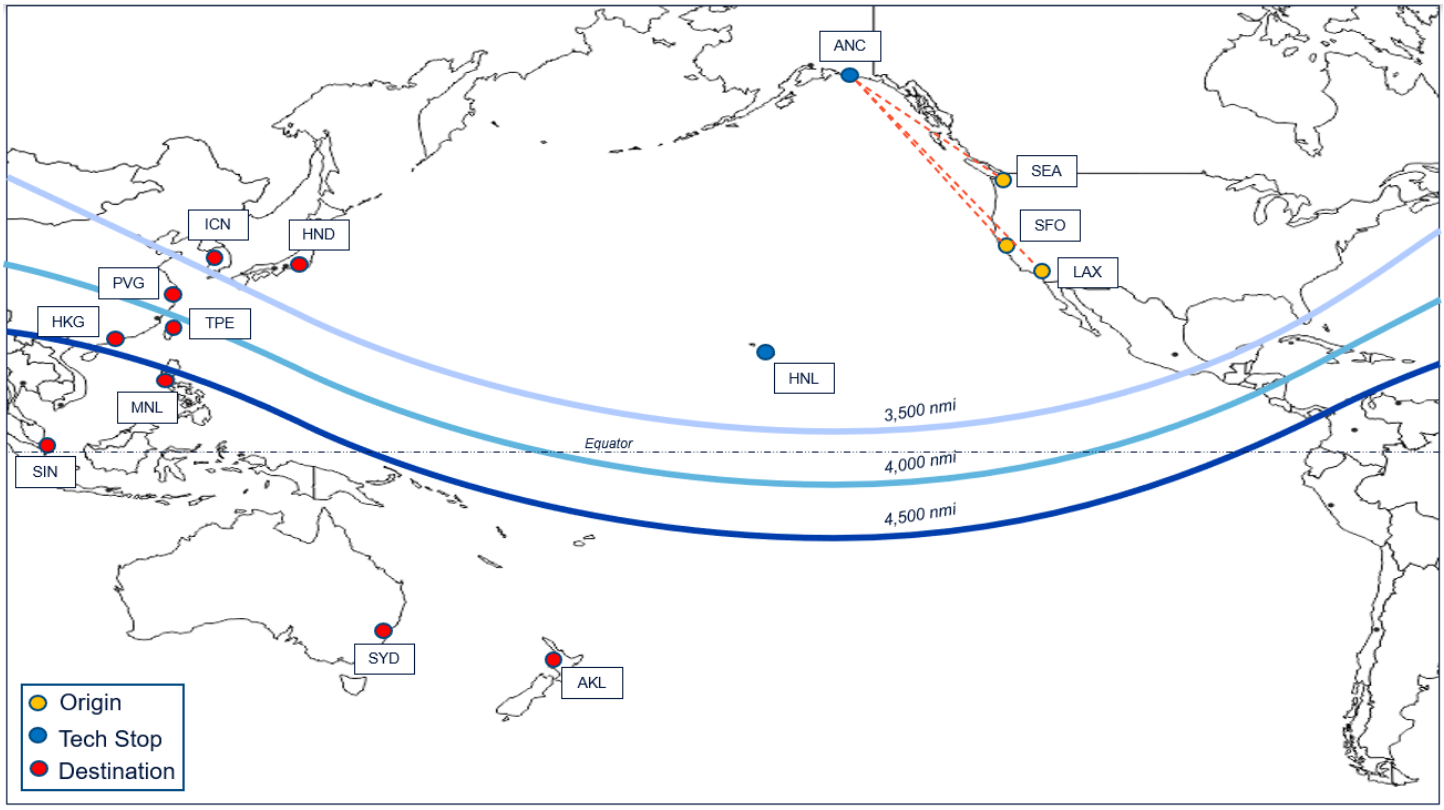

Figure 3.1: Maximum range for aircraft using Anchorage as the tech stop location

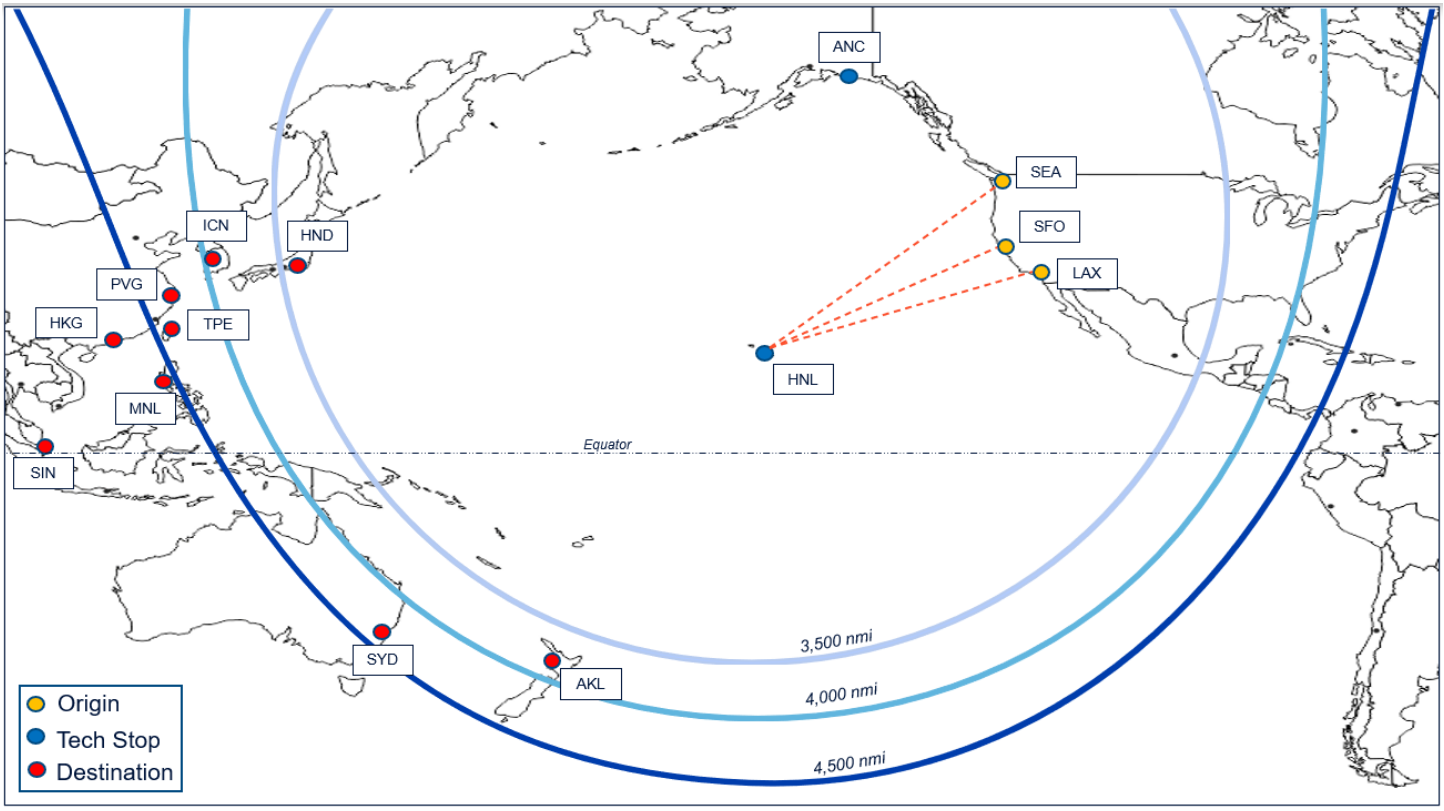

Figure 3.2: Maximum range for aircraft using Honolulu as the tech stop location

To determine the economic feasibility of a tech stop route, an "equivalent Mach" was calculated based on the total time to get from the origin to destination. The equivalent Mach is representative of the Mach number an aircraft would have to cruise at to fly from the origin to destination directly in the same amount of time as it took to fly from the origin to destination using a tech stop.

- Gate-to-Gate time at Mach X for A -> B -> C = Gate-to-Gate time at equivalent Mach Y for A -> C

The equivalent Mach number is passed through the price elasticity curves and the max aircraft utilization equation. Since willingness-to-pay is based on time savings, the equivalent Mach number is more representative than the aircraft design Mach for the elasticity curves. Equivalent Mach numbers less than Mach 1.0 resulted in no high-speed flight passengers for that route, effectively making it non-viable. Max aircraft utilization refers to the number of flights an aircraft can complete in a single day, so the equivalent Mach helps represent the time it takes to go from origin to destination.

The total gate-to-gate time used to back out the equivalent Mach is based on the flight time from origin to tech stop, time at tech stop, and flight time from tech stop to destination. Flight time calculations are based on taxi time, takeoff/landing, ascent/descent, acceleration/deceleration, and cruise time. The tech stop time is based on three main factors: cool down time (Mach dependent), refueling time (based on fuel consumption), and additional time for inspections and inefficiencies. Cool down time uses Newton's Law of Cooling to determine the time it takes the aircraft to reach a tolerable temperature. The temperature upon landing is based on data from a report[3] that quantifies temperature at several Mach numbers. 100ºF was determined to be the final temperature at which the aircraft becomes serviceable and thermal conductivity coefficient of 0.075 W/m*K was used which is reflective of composite materials. For refueling time, data for similarly sized aircraft was used to determine the refueling time of the high-speed aircraft[4].

Finally, an additional 20 minutes is added to the tech stop time to account for longer inspection times and inefficiencies. As longer inspections are assumed to occur in parallel with cool down and refueling, the additional 20 minutes was determined to be a sufficient amount of margin to cover all inspection and aircraft turnaround activities.

Given the capabilities of HSCA ROSETTA Model, it was assumed that tech stop turnarounds go smoothly and no major issues occur. This ensures consistent gate-to-gate times in our simulations. It also removes the real-world scenario where excessively long tech stop times result in no actual time savings compared to subsonic flights, making passengers switch planes, and/or refunding passengers in some capacity. These scenarios were considered but not modeled. The variable tech stop time modeling capability was captured in the MIDAS model.

Before looking at the results, the additional market potential with tech stops can be seen in Table 3.3. This can significantly boost the potential market of short-range aircraft that previously could only address a subset of the transatlantic routes.

Table 3.3: Total Reachable Routes are a subset of the 29 transpacific routes in the model

Design Range	Total Reachable Routes	Via Direct	Via Tech Stops	Additional Enabled Market
3,500 nmi	9	0	9	~4.55M Pax
4,000 nmi	15*	1	14	~6.86M Pax
4,500 nmi	23*	5	18	~11.3M Pax

**Includes LAX-LIM as a direct route*

The initial impact of tech stops can be quantified when looking at tech stop time, equivalent Mach, and gate-to-gate times for a specific route. Table 3.4 considers the impact at each Mach number for a 4,000 nmi, 50 passenger aircraft and presents the baseline estimates for analysis. The tech stop times and equivalent Mach numbers are for aircraft flying a variety of routes within the business case. As a reminder, equivalent Mach numbers less than one result in no high-speed demand for that route. The gate-to-gate times are specifically for the LAX-HND route which has a direct subsonic flight time of about 10 hours, 30 minutes (varies depending on direction of flight).

Table 3.4: Tech stop times (excludes taxi time), equivalent Mach numbers, direct Gate-to-Gate (GtG) times, and Gate-to-Gate times with tech stops

Mach	Tech Stop Time (hr : min)	Equivalent Mach	Direct GtG Time	Tech Stop GtG Time
1.5	~0:40	< 1.0	~6:20	~8:20
2	~0:40	1.03 – 1.25	~5:15	~7:10
3	~1:05	1.65 – 1.90	~3:40	~5:45
4	~1:15	2.10 – 2.40	~2:45	~4:50
5	~1:25	2.23 – 2.55	~2:25	~4:35

Gate-to-gate times are roughly two hours more for tech stop routes compared to a direct flight with the same design Mach. However, the aircraft flying direct would be a larger aircraft and more expensive which could potentially make the business case unsuccessful. Gate-to-gate times for tech stop routes still had noticeable improvements over subsonic flights though.

All tech stop business cases achieved 25% IRR, even at the higher Mach numbers where the original (direct flights only) business cases started to fall short of this objective. And since tech stop cases enabled aircraft to remain smaller while capturing more demand, ticket prices and aircraft prices were less impacted by increasing design Mach. This enabled greater market capture compared to the original cases, especially at higher Mach numbers. Mach 1.5 cases had equivalent Mach numbers less than 1.0 so no tech stop routes were viable and therefore, generated the same results as the original cases. Figures 3.5a-d below show tech stop contour plots compared to prior results without tech stops (white space indicates business cases that did not achieve the 25% IRR objective).

[3]T.K. Tsotsis, in Failure Mechanisms in Polymer Matrix Composites, 2012, https://www.sciencedirect.com/topics/engineering/supersonic-aircraft

[4]https://pilotteacher.com/how-long-to-refuel-an-airplane-15-most-common-planes/

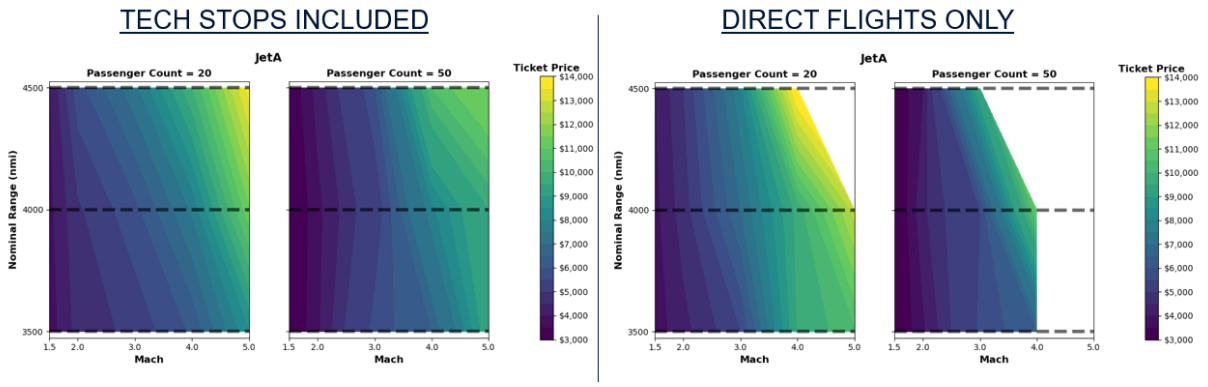

Figure 3.5a: Ticket Price

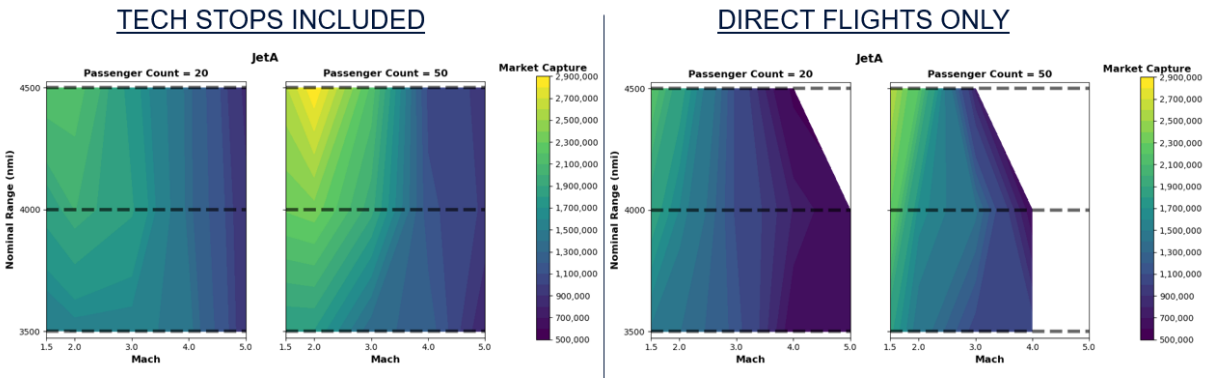

Figure 3.5b: Market Capture

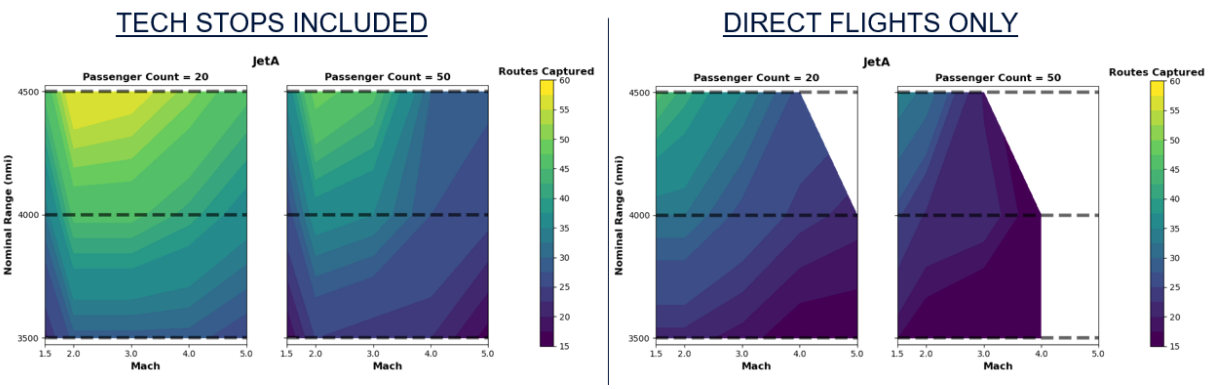

Figure 3.5c: Routes Captured

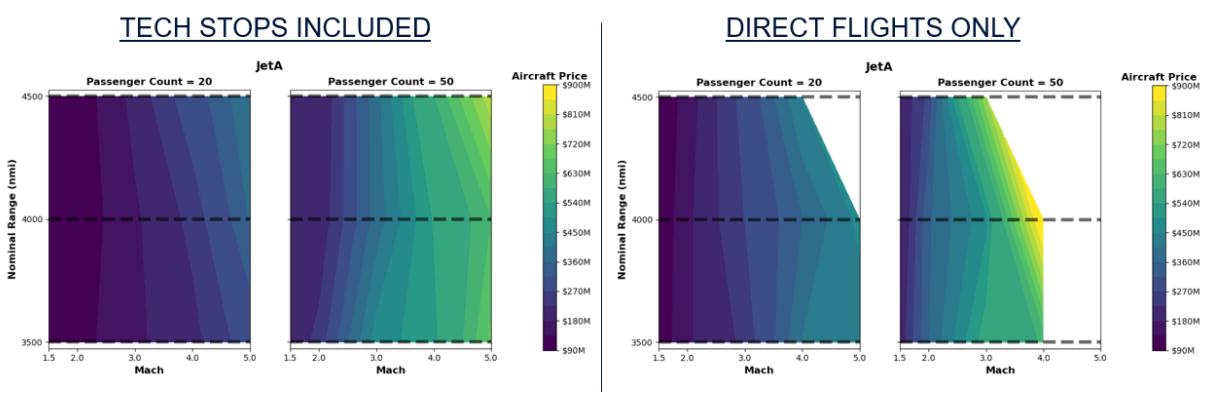

Figure 3.5d Aircraft Price

Although tech stop cases performed better than almost all of the original cases at the same design range, they did not outperform the best overall case from the original results of ~3.0M annual passengers for a Mach 1.5, 5,700 nmi, 50 pax aircraft. Tech stops therefore aren't the definitive solution, but they do offer a more appealing business case for those pursuing faster aircraft or those that simply want to have a smaller aircraft to reduce development and acquisition costs but still address some of the transpacific market.

For tech stops, the time on the ground between flight legs is a major factor for the viability of this scenario. Therefore, a sensitivity analysis was conducted to evaluate the impact of tech stop time to the overall business case. Tech stop times were increased until the equivalent Mach was ~1 for a given design Mach. Figure 3.6 shows the equivalent Mach numbers for tech stop time sweeps for Mach 3, 4, and 5. Mach 2 aircraft all had equivalent Mach numbers less than 1.5 which falls outside the aircraft design space. Mach 1.5 aircraft achieve an equivalent Mach of 1 if the tech stop time was roughly 6 minutes. This was too short and therefore, Mach 1.5 aircraft are not considered in this sensitivity study.

Looking at the overall trends of the sensitivity study, cases typically performed better with shorter tech stop times and saw little change in economic performance up to a point. That point roughly corresponded with the equivalent Mach of 1.8 for design Mach 3, 4, and 5 cases. After this point, fluctuations in the data occur as the operator must balance the benefits of additional routes versus the detriment of buying aircraft that may not be able to fly multiple times per day due to time constraints (more aircraft for roughly the same demand).

The equivalent Mach of 1.8 also acts as a rough threshold of sorts when comparing tech stop cases to Mach 2 and Mach 3 long-range aircraft (4,500 – 6,510 nmi design ranges) that only fly direct. For Mach 3 aircraft, equivalent Mach numbers greater than 1.8 perform roughly the same as direct Mach 2 aircraft in terms of market capture (see Figure 3.8). Equivalent Mach numbers less than 1.8 had less market capture than most direct Mach 2 aircraft but had more market capture than most direct Mach 3 aircraft. For Mach 4 aircraft, above 1.8 performed better than all direct Mach 3 aircraft but worse compared to most direct Mach 2 aircraft. Below 1.8, tech stop cases performed better or comparable to most direct Mach 3 aircraft. Finally, for Mach 5 aircraft, above 1.8 also had greater market capture than most direct Mach 3 aircraft but not as significantly as Mach 4 aircraft. Then below 1.8, cases performed worse than the direct Mach 3 aircraft with shorter design ranges but better than the direct Mach 3 aircraft with longer design ranges.

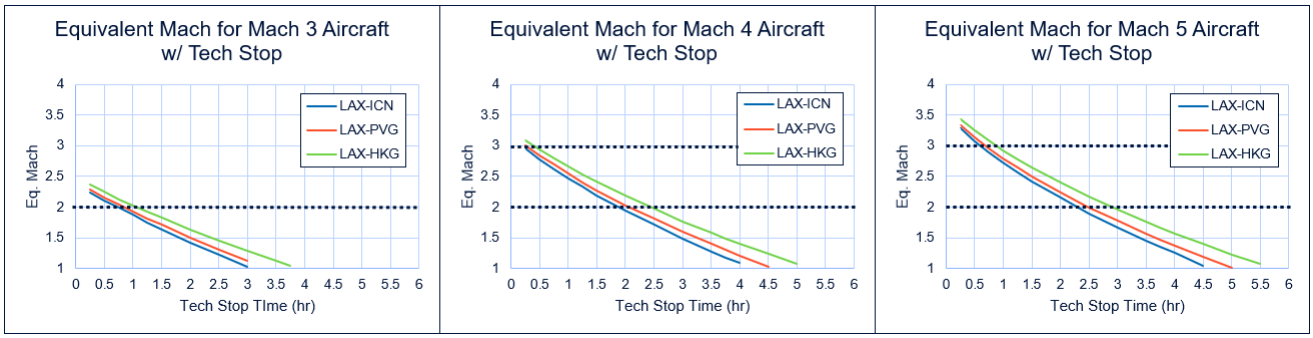

Figure 3.6: Equivalent Mach numbers for Mach 3, 4, and 5 aircraft based on varied tech stop times

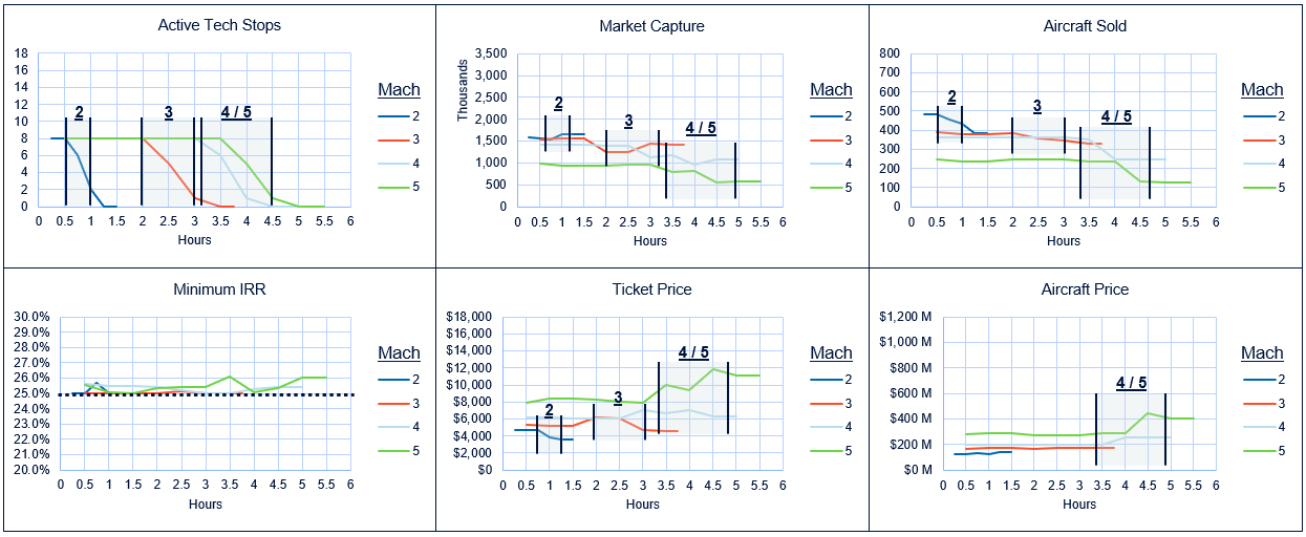

Figure 3.7: Economic metrics versus tech stop duration

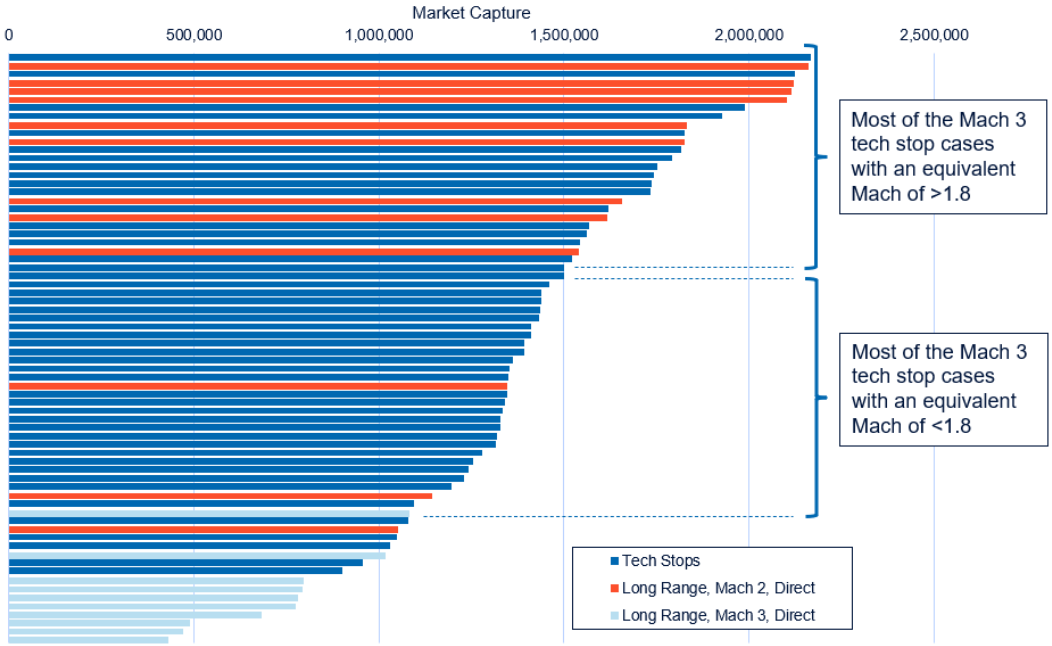

Figure 3.8: Mach 3 aircraft with tech stops compared to long-range Mach 2 and Mach 3 aircraft flying direct

Overall, tech stops generally helped businesses cases for most aircraft, especially at higher Mach numbers for the same range. Tech stops enable more feasible business cases for faster aircraft, but they still fall short of slower aircraft that can fly directly. The impact of a tech stop is reflected in willingness-to-pay with the shorter tech stop times performing the best. However, there is some time margin (depending on the design Mach) that has little impact on the overall business case. After exceeding this margin, results indicated that some tech stop routes became more costly than beneficial due to worse aircraft utilization and passenger efficiency, both resulting in more aircraft for the operator to buy with minimal increase in demand. Ultimately, faster aircraft have more potential to utilize tech stops while slower aircraft (Mach 1.5 and Mach 2) are better suited to be designed for longer ranges and fly directly.

MIDAS Model Updates

The tech stop scenario was implemented in MIDAS, which allows for transpacific routes to use a tech stop at either Honolulu, Hawaii or Anchorage, Alaska (see Figure 3.9). With this option enabled, route viability for a given aircraft type will be considered by converting a 2-airport route into a 3-airport route with shorter legs. Priority will still be given to servicing a 2-airport route. In addition, the equivalent Mach and tech stop turnaround time calculations described above were implemented in MIDAS. The agent-based modeling for a "Plane" agent was updated to include an additional branch if tech stops are enabled (Figure 3.10) and in use for a particular plane servicing its route (Figure 3.11).

Added **Anchorage** (AK) and **Honolulu** (HI) as tech stop airports

Figure 3.9: Tech Stop Airports Active on Animation Dashboard

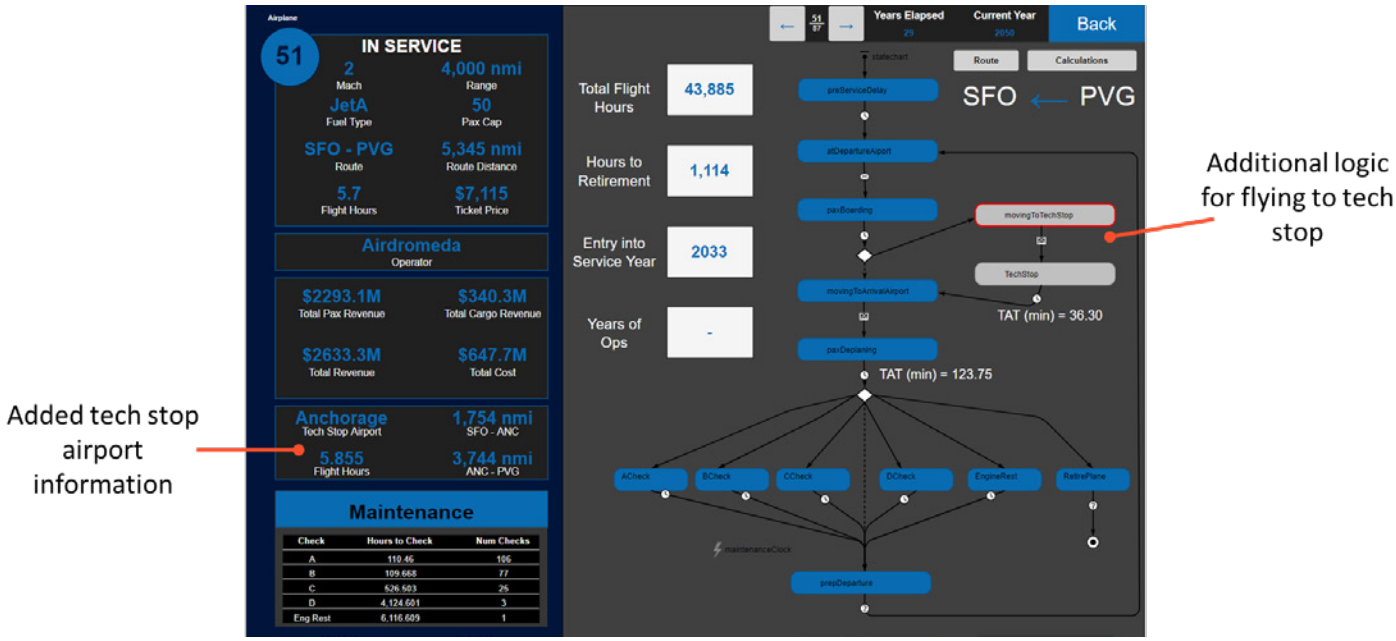

Figure 3.10: Plane Dashboard with Tech Stop

Figure 3.11: Route Dashboard with Tech Stop

4 - Demand-based Mixed Fleet Analysis

BACKGROUND

In the base effort for this study, a mixed fleet analysis was conducted using two aircraft to service short- and long-range routes, roughly representing the transatlantic and transpacific routes, respectively. Routes were therefore distributed based on the route distance and the aircrafts' design ranges. Assuming a route met demand criteria of requiring at least one flight per day, the short-range aircraft captured all routes up to its design range while the long-range aircraft captured all routes that fell between the design ranges of the two aircraft.

Given the high concentration of demand on the transatlantic routes (50% of total market in the model within 4,000 nmi), the long-range aircraft typically had a more difficult time capturing market since it needed to balance market capture with the incremental cost increases associated with a longer-range aircraft. Alternatively, the short-range aircraft was more catered to the large transatlantic routes (JFK-LHR) and therefore, may have dropped some of the smaller routes that could be addressed. The results were marginally better than single aircraft cases in terms of total demand captured, but they came with significant cost increases that negated any benefit. Because of these disparities, it was recommended by SpaceWorks that a "demand-based" approach be considered to better utilize aircraft and split demand.

OVERVIEW

With the demand-based mixed fleet (DBMF) approach, one aircraft addressed routes with larger markets exclusively within its design range while the other aircraft addressed all other routes within its design range. This enabled the first aircraft to be better sized for a small set of high demand routes while still enabling a smaller, longer-range aircraft to address transatlantic routes. Configuring the two aircraft to be more aptly sized for the routes each aircraft was addressing allowed for a more balanced distribution of demand in the simulation overall.

For the purposes of this analysis, a few major assumptions were determined:

- The first aircraft (AC1) addressed pre-specified routes based on market size with consideration given to route distance and common origin-destination
- The second aircraft (AC2) starts service 5 years after AC1 in a leader-follower scenario
  - No technology or economic improvements are assumed here (see the previous report for k-factors and their impact (IOC Sensitivity study) as start of operations is pushed out)
- There are two engine manufacturers and two airframe manufacturers that share no synergies or heritage
  - Both aircraft are operated by a single operator
  - This assumption is consistent with the original mixed fleet analysis

METHODOLOGY

An iterative approach was taken for this analysis in order to focus it around areas of interest. Each iteration took lessons learned from the previous iteration to guide the next set of parametric inputs (Mach, passenger count, range, etc.) based on the "best" cases identified. The best cases were ones that had the highest market capture while maintaining low ticket prices for both aircraft. Ultimately, the final results were compared against single aircraft cases to determine if economic benefits could be realized using the DBMF approach.

As mentioned earlier, AC1 addressed pre-specified routes based on market size with consideration given to route distance and common origin-destination. From this, five "tranches", or buckets, were determined as can be seen in Table 4.1 with "YES/NO" indicating if a route was included in the tranche or not. Multiple tranches were considered to determine how the distribution of demand impacted the overall business case. All the routes included in each tranche are transatlantic so that the design range of AC1 doesn't compound the sizing effects of higher passenger counts typically associated with AC1. Tranches 1 (two routes) and 2 (five routes) are straightforward as these are the largest routes in the model and all have JFK as an origin. Tranche 3 (eight routes) adds three more routes with high demand and includes additional consideration for distance, hence including IAD-LHR over ATL-CDG as it has a shorter distance. The three additional routes also all share LHR as a common destination. Tranche 4 (ten routes) adds the next largest routes which are Atlanta based. Tranche 5 (12 routes) was eventually added and included the next two largest routes after those in Tranche 4. Ten other routes had comparable market sizes but were ruled out mainly due to route distance. Eight were transpacific with distances well over 5,000 nmi. The other two were JFK and MIA to GRU with flight distances close to 5,000 nmi (assuming aircraft have to fly around Brazil to maintain over-water flight).

Table 4.1: Routes included in each Tranche

Route	Annual Market Size (PAX/yr)	Distance (nmi)	*Tranche 1*	*Tranche 2*	*Tranche 3*	*Tranche 4*	*Tranche 5*
JFK-LHR	4.0M	3,000	✓	✓	✓	✓	✓
JFK-CDG	1.9M	3,158	✓	✓	✓	✓	✓
JFK-AMS	1.2M	3,334	×	✓	✓	✓	✓
JFK-FRA	1.3M	3,351	×	✓	✓	✓	✓
JFK-MAD	1.2M	3,118	×	✓	✓	✓	✓
MIA-LHR	1.0M	3,845	×	×	✓	✓	✓
BOS-LHR	0.94M	2,837	×	×	✓	✓	✓
IAD-LHR	0.82M	3,195	×	×	✓	✓	✓
ATL-CDG	0.83M	4,021	×	×	×	✓	✓
ATL-AMS	0.79M	4,082	×	×	×	✓	✓
JFK-BCN	0.72M	3,329	×	×	×	×	✓
MIA-MAD	0.70M	3,844	×	×	×	×	✓

Iteration 1 covered the broadest sweep to identify high level trends. The following Table 4.2 lists the key parameters for each aircraft which generated 180 cases. Note that the design range for AC1 is based on the longest route it addresses (rounded up to the nearest 100 nmi) within each tranche.

From the first iteration, several key trends were identified:

- Two routes are insufficient to generate the demand needed for manufactures of AC1 to achieve economies of scale
  - Better cases (and more of them) were found as the number of routes in each tranche increased
- Higher Mach number aircraft (Mach 3+) struggled to achieve significant demand capture due to higher costs and lower production rates
- For AC2, a design range of 5,700 nmi proved to be the best
  - 6,100 nmi and 4,500 nmi aircraft performed similarly but just slightly worse

There were 26 cases that were considered the "best" for this iteration. Of those 26, only three cases (all Tranche 4) achieved marginally higher market capture (2.9-3.0M) than the best single aircraft previously identified*. These three cases all had Mach 1.5 aircraft for both aircraft types. Also worth noting, four cases had one Mach 3 aircraft that were considered one of the "best" cases. However, these cases had the lowest market capture (1.5-1.9M) of the 26 identified cases. Finally, Tranche 2 had only one "best" case while Tranche 1 had zero, further emphasizing the need of more routes for AC1.

*Mach 1.5 | 5,700 nmi | 50 pax | $3,800 Ticket Price | 2.89M pax/yr | ~$200M aircraft | 434 aircraft sold | 50 routes captured

Table 4.2: Trade Matrix of aircraft configurations for Iteration 1

AC1 Routes	AC1 Mach	AC1 Range (nmi)	AC1 Pax		AC2 Routes	AC2 Mach	AC2 Range (nmi)	AC2 Pax
2	1.5 – 5	3,200	50		Varied	1.5 – 3	4500, 5700, 6100	20
5	1.5 – 5	3,400	50		Varied	1.5 – 3	4500, 5700, 6100	20
8	1.5 – 5	3,900	50		Varied	1.5 – 3	4500, 5700, 6100	20
10	1.5 – 5	4,100	50		Varied	1.5 – 3	4500, 5700, 6100	20

Iteration 2A narrowed the Mach number inputs based on the results of Iteration 1 and then varied passenger count as seen in Table 4.3 below. The intent with Iteration 2A was to explore the impact of passenger counts, and to confirm some of the key trends identified in Iteration 1. This iteration still only looked at Tranches 1-4.

This iteration emphasized the lack of success for cases within Tranche 1 seen in Iteration 1 as well as the preference for AC2 to have a 5,700 nmi design range. Overall, results indicated that AC1 and AC2 gravitated towards 40 and 30 passengers, respectively, to generate the best cases. It's worth noting that the top cases here, as Mach 2 aircraft, still achieved market capture comparable to the best Mach 1.5 aircraft cases in Iteration 1.

Iteration 2B expanded upon Iteration 2A to include Mach 1.5 and more Mach 3 aircraft. Additional changes were included to focus the trade space around the best solutions identified from earlier iterations. Table 4.4 captures these changes. The biggest change is the removal of Tranche 1 and addition of Tranche 5. Tranche 1 was removed since results consistently fell below the results of other tranches. Tranche 5 was added to see if Tranche 4 results were hitting an upper bound, or if they were actually representing the best distribution of routes. Therefore, this iteration only considered Tranches 2-5.

This iteration produced results with significantly higher market capture (in the 3.5-4.7M range) which *initially* indicated better results were being achieved with Mach 1.5 aircraft. However, after closely analyzing these high performing cases, it was clear that the optimizer was taking advantage of model behavior. The operator had one aircraft generating significant revenue (typically AC1) while the other aircraft operated at a loss to generate significant demand (typically AC2), but the combined cash flows had a net positive return. Not all cases behaved this way, but the cases that didn't display this behavior did not generate significantly higher demand compared to the top single aircraft cases.

Realistically though, an operator would not utilize an aircraft that did not generate positive returns, nor would it use one aircraft's profits to significantly compensate for the other. Therefore, even though the results of Iteration 2B looked impressive at the surface, the unrealistic behavior makes these results questionable.

Table 4.3: Trade Matrix of aircraft configurations for Iteration 2A

AC1 Routes	AC1 Mach	AC1 Range (nmi)	AC1 Pax		AC2 Routes	AC2 Mach	AC2 Range (nmi)	AC2 Pax
2	2	3200	40/50/60		Varied	2 – 3	4500, 5700, 6100	20/30/40
5	2	3400	40/50/60		Varied	2 – 3	4500, 5700, 6100	20/30/40
8	2	3900	40/50/60		Varied	2 – 3	4500, 5700, 6100	20/30/40
10	2	4100	40/50/60		Varied	2 – 3	4500, 5700, 6100	20/30/40

Table 4.4: Trade Matrix of aircraft configurations for Iteration 2B

AC1 Routes	AC1 Mach	AC1 Range (nmi)	AC1 Pax		AC2 Routes	AC2 Mach	AC2 Range (nmi)	AC2 Pax
~~2~~	~~2~~	~~3,200~~	~~40/50/60~~		~~Varied~~	~~2 – 3~~	~~4500, 5700, 6100~~	~~20/30/40~~
5	1.5 – 3	3,400	40/~~50~~/60		Varied	1.5 – 3	4500*, 5700, ~~6100~~	20/30/~~40~~
8	1.5 – 3	3,900	40/~~50~~/60		Varied	1.5 – 3	4500*, 5700, ~~6100~~	20/30/~~40~~
10	1.5 – 3	4,100	40/~~50~~/60		Varied	1.5 – 3	4500*, 5700, ~~6100~~	20/30/~~40~~
12	1.5 – 3	4,100	40/~~50~~/60		Varied	1.5 – 3	4500*, 5700, ~~6100~~	20/30/~~40~~

To get around this model behavior, Iteration 3 (Final Iteration) used a split optimization approach that optimized each aircraft's business case to a range of IRRs. AC1 IRR was swept from 20-40% initially and then refined to 25-33%. AC2 IRR was swept from 10-30% initially and then refined to 15-25%. This approach ensures both aircraft achieve positive cash flows and don't intentionally tank financials of one aircraft to gain higher market capture. The optimized parameters for the single aircraft optimizations were then passed through a mixed fleet model for combined business case results. Each set of AC1 parameters was paired with each set of AC2 parameters. The technical parameters can be seen in Table 4.5. Only Tranches 3-5 were considered for Iteration 3.

Since manufacturers were optimized to 25% IRR for the single aircraft cases and are completely separate entities in the mixed fleet analysis, they were unaffected during the joint mixed fleet case runs that combined single aircraft optimized parameters, and thus, remained at 25% IRR. This approach does lose some precision in its results, but successful cases have IRRs that only vary by fractions of a percent. Results that varied by more than 1% from 25% IRR were filtered out. The Analysis/Results section focuses only on Iteration 3 results. Iterations 1 and 2A/B provided the guidance to hone in on the aircraft configurations that have the most potential of success to be analyzed during Iteration 3.

ANALYSIS/RESUTLS

Iteration 3 produced a multitude of viable results given the optimization approach. All the results analyzed had a minimum IRR between 24-26% and annual passengers per year was the main metric used to identify the best cases. To that extent, Tranche 4 produced the best case with a total market capture of 3.26M passengers per year, 370k more passengers than the best single aircraft case. The key metrics for the mixed fleet are below:

- AC1 (individually, 30% IRR): Mach 1.5, 4,100 nmi, 40 pax, $3,960 Ticket Price, $195M Aircraft Price, 231 Aircraft Sold
- AC2 (individually, 15% IRR): Mach 1.5, 5,700 nmi, 30 pax, $3,330 Ticket Price, $145M Aircraft Price, 565 Aircraft Sold

Table 4.5: Trade Matrix of aircraft configurations for Iteration 3

AC1 Routes	AC1 Mach	AC1 Range (nmi)	AC1 Pax		AC2 Routes	AC2 Mach	AC2 Range (nmi)	AC2 Pax
8	1.5 – 3	3,900	40		Varied	1.5 – 3	4500*, 5700	30
10	1.5 – 3	4,100	40		Varied	1.5 – 3	4500*, 5700	30
12	1.5 – 3	4,100	40		Varied	1.5 – 3	4500*, 5700	30

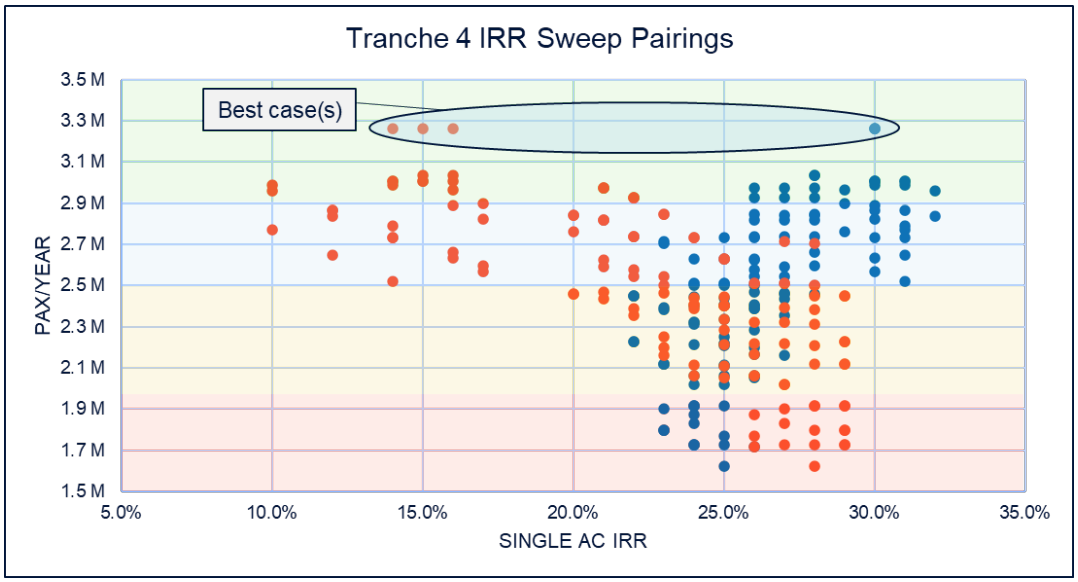

Figure 4.1: Tranche 4 results for individual aircraft market capture; Mixed fleets consist of one blue dot paired with one orange dot (there may be overlap of dots) on the same horizontal line

As can be seen in the Figure 4.1 above, the better results were cases that had a great disparity between single aircraft IRR. This emphasizes the time value of money that IRR calculations consider: a dollar today is worth more than a dollar tomorrow. Essentially, the higher IRRs of AC1 reflect higher profit margins. Since AC2 is delayed five years before entering service, the significant gains achieved with AC1 hold more weight in the mixed fleet. This means AC2 doesn't need to achieve as high of an IRR value for the mixed fleet to be successful. Furthermore, this enables AC2 to charge a lower ticket price to boost the overall demand captured. It also explains why the cases where AC2 had the higher IRR performed the worst relative to the rest of the results.

Tranches 3 and 5 also produced similar (just slightly lower) results (see Figures 4.2, 4.3 below). Tranche 3 suffered from having two less routes for AC1 so the production rates couldn't achieve similar economies of scale like they did for Tranche 4. This drives up aircraft prices which means the operator has to compensate with higher ticket prices which can be seen in the metrics of the best Tranche 3 case.

- AC1 (28% IRR): Mach 1.5, 3,900 nmi, 40 pax, $4,300 Ticket Price, $320M Aircraft Price, 121 Aircraft Sold
- AC2 (17% IRR): Mach 1.5, 5,700 nmi, 30 pax, $3,470 Ticket Price, $140M Aircraft Price, 566 Aircraft Sold

Although AC2 had similar metrics as it did in Tranche 4, AC1 metrics were notably worse and reflect the lost demand from the two routes.

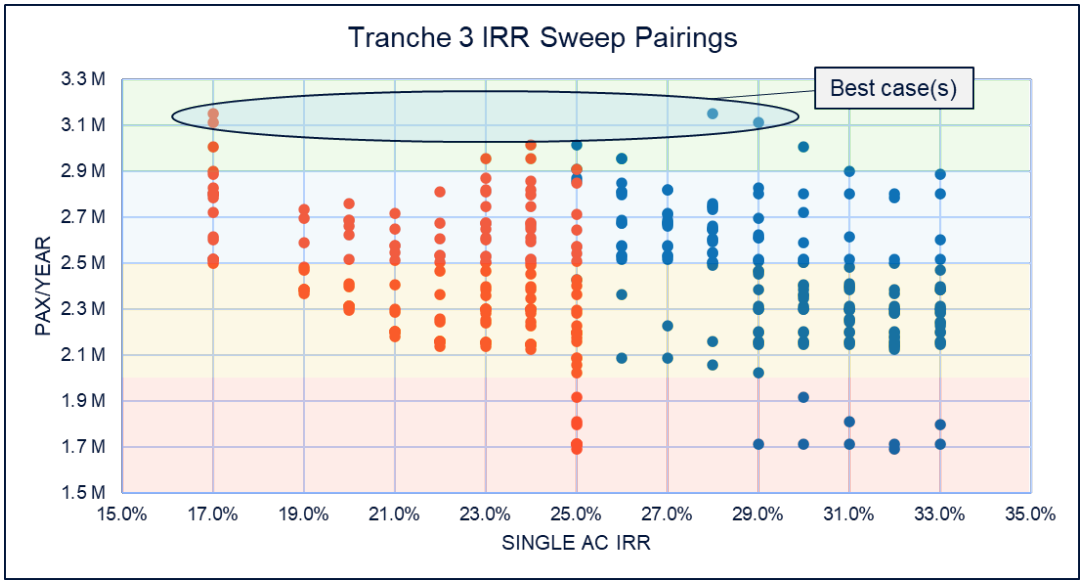

Figure 4.2: Tranche 3 results for individual aircraft market capture; Mixed fleets consist of one blue dot paired with one orange dot (there may be overlap of dots) on the same horizontal line

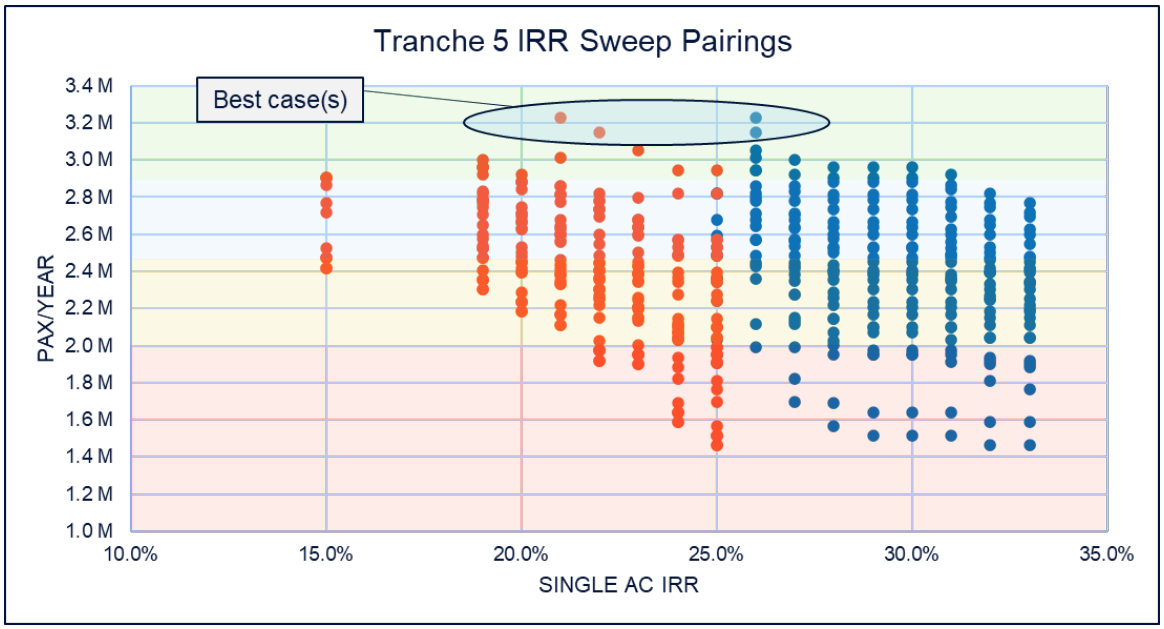

Figure 4.3: *Tranche 5 results for individual aircraft market capture; Mixed fleets consist of one blue dot paired with one orange dot (there may be overlap of dots) on the same horizontal line*

Tranche 5 produced a tighter distribution of results that reflects a more balanced distribution of demand between the two aircraft. The manufacturers for AC1 have less difficulty achieving economies of scale. There is a slight degradation in AC2 metrics, specifically with Aircraft Sold and Ticket Price, but these are still reasonable values.

- AC1 (26% IRR): Mach 1.5, 4,100 nmi, 40 pax, $3,150 Ticket Price, $210M Aircraft Price, 254 Aircraft Sold
- AC2 (21% IRR): Mach 1.5, 5,700 nmi, 30 pax, $4,430 Ticket Price, $160M Aircraft Price, 419 Aircraft Sold

Ultimately, all three Tranches have viable solutions but due to reduced demand for each manufacturer, these solutions are only viable when aircraft prices can be kept low and enable the operator to buy more of each aircraft. This is why all the best solutions have Mach 1.5 aircraft, as slower aircraft are typically less expensive. This highlights another point: the operator must balance market capture with acquisition costs. The more demand, the more aircraft the operator must buy and therefore, optimizations must strike a balance between higher demand for the manufacturers and lower acquisition costs for the operator.

COMMON ENGINE CORE CASE STUDY

During the Demand-based mixed fleet analysis, AC1 and AC2 for each case were compared to see if the aircraft had similar engine thrusts. For thrusts to be considered similar, the engine thrust of the smaller engine had to within 20% of the larger engine and both engines had to operate at the same Mach number to account for material & operating requirements. The objective here was to determine if certain cases could be modified to have a single engine manufacturer and realize any potential cost savings.

For the cases identified, a manual optimization was performed after the following model modifications were made.

- Engine manufacture production rates and cash flows were combined to simulate a single engine manufacturer
- Ignition thrust was set equal for both aircraft to force the sizing model to generate a common engine core and size each aircraft accordingly
    - The larger engine's thrust was used as the default engine thrust value meaning only one aircraft would have its size/mass impacted
- Ticket prices, aircraft prices, and engine price were then manually adjusted until IRRs were all roughly the same and around 25%
    - Each aircraft still achieved at least a 10% IRR on its own

Three cases were analyzed at each Mach number (1.5, 2, & 3) with each having different disparities between the original engine thrusts.

Case 1

For Case 1, engine thrusts were almost identical to begin with so sizing was minimally impacted as AC2's MTOW only increased by ~1%. Therefore, AC2's DDT&E and TFU costs are relatively unaffected which make any cost savings or losses directly attributable to modeling a single engine manufacturer rather than two. Looking at Table 4.6, improvements can be seen across all economic metrics. Ticket prices are down, market capture is up, aircraft and engine prices are down, and number of aircraft sold is up. This is all due to a consolidation of engine production/demand which enables economies of scale (lower production costs) and lessens the economic impact of development costs for two engines.

Table 4.6: Common Engine Core – Case 1 inputs and outputs

Metric	Original Optimization (no Common Core)	Manual Optimization (w/ Common Core)
Aircraft	AC1 | AC 2	
Mach	2 | 2	
Range (nmi)	4,100 | 5,700	
Passenger Count	60 | 30	
Ticket Price	$4,550 | $6,680	$3,900 | $6,000
Market Capture	2.16M PAX/yr	2.49M PAX/yr
Aircraft Price	$485M | $285M	$370M | $260M
Aircraft Sold	96 | 209	110 | 268
Engine Price	$39M | $26M	$22M
Engine Thrust (lbf)	**18,400 | 18,100**	**18,400**
Aircraft MTOW (lbm)	197,000 | 193,000	197,000 | 195,000
Aircraft MEW (lbm)	79,900 | 67,400	79,900 | 67,800

Case 2

This case is interesting because it involves Mach 3 aircraft, and the difference in engine thrusts is almost at the 20% limit as seen in Table 4.7. The greater difference in engine thrusts meant a greater impact on how AC2 was sized which led to a ~11% increase to MTOW. On the economic side, AC1 saw all the benefits while the negative sizing impacts to AC2 effectively negated any potential improvements to its economics. AC1 ticket price and aircraft price were noticeable lower with reduced engine prices. This resulted in a small but appreciable increase in market capture (~60k passengers per year). Even at a more technically complex region of the trade space, improvements to the engine manufacturers business case were realized in the overall business case.

Table 4.7: Common Engine Core – Case 2 inputs and outputs

Metric	Original Optimization (no Common Core)	Manual Optimization (w/ Common Core)
Aircraft	AC1 | AC 2	
Mach	3 | 3	
Range (nmi)	4,100 | 4,500	
Passenger Count	40 | 20	
Ticket Price	$9,040 | $7,860	$7,900 | $7,900
Market Capture	1.03M PAX/yr	1.09M PAX/yr
Aircraft Price	$660M | $350M	$500M | $375M
Aircraft Sold	71 | 120	84 | 119
Engine Price	$59M | $34M	$35M
Engine Thrust (lbf)	**19,300 | 15,600**	**19,300**
Aircraft MTOW (lbm)	206,000 | 166,000	206,000 | 184,000
Aircraft MEW (lbm)	76,100 | 59,300	76,100 | 65,700

Case 3

For this case, Mach 1.5 aircraft were evaluated with engines starting off about 12% apart in terms of thrust, which is roughly in the middle for the three cases analyzed. At this design point, there were still some sizing impacts (~4% increase to MTOW) but not as significant as the previous case. However, as seen in Table 4.8, the starting economics for the original optimization were achieved by already having cheaper aircraft and engines so the potential economic improvements were not as great as they were in Case 1. AC1 saw some improvement economically, adding 80,000 passengers, but AC2 ticket price was unchanged so no demand improvement was realized for that aircraft. However, the aircraft and engine were more expensive for AC2 which limited the potential gains that AC1 could realize since it had to also compensate for the degraded economics of AC2.

Table 4.8: Common Engine Core – Case 3 inputs and outputs

Metric	Original Optimization (no Common Core)	Manual Optimization (w/ Common Core)
Aircraft	AC1 | AC 2	
Mach	1.5 | 1.5	
Range (nmi)	4,100 | 5,700	
Passenger Count	60 | 30	
Ticket Price	$4,750 | $3,360	$4,400 | $3,360
Market Capture	3.04M PAX/yr	3.12M PAX/yr
Aircraft Price	$355M | $135M	$310M | $160M
Aircraft Sold	111 | 557	114 | 555
Engine Price	$26M | $11M	$15M
Engine Thrust (lbf)	**15,200 | 13,300**	**15,200**
Aircraft MTOW (lbm)	162,000 | 142,000	162,000 | 148,000
Aircraft MEW (lbm)	71,500 | 55,100	71,500 | 57,800

CONCLUSIONS

The main limitation for the DBMF analysis (and mixed fleet analysis in general) is the production rates for the manufacturers. Although the operator is able to achieve a more balanced and efficient fleet with this approach, the balance prevents one or both of the manufacturers from achieving the economies of scale seen with single aircraft cases. Additionally, the operator has some incentive to limit production in order to reduce their acquisition costs by raising ticket prices and therefore, reducing market capture.

In the final iteration with optimized single aircraft being paired, results were notably higher than the best single aircraft case previously evaluated. Unlike the mixed fleet analysis in the base study (aircraft split purely by distance), the demand-based approach yielded results where both aircraft are better suited for their addressable routes. With aircraft more tailored for the routes they are addressing, the business case solutions can achieve higher market capture without significantly increasing costs for one or both aircraft.

Common Core manual optimizations indicated positive trends when assuming one engine manufacturer that supplies two aircraft integrators/manufacturers. Significant gains were realized when the engines were initially very close in thrust class. For Mach 1.5 aircraft, the impact of a common core seems to be somewhat limited due to the aircraft and engines already being relatively cheap which

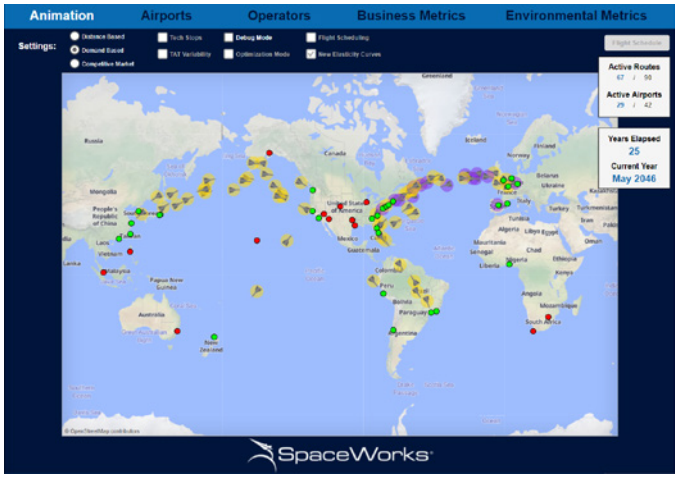

Figure 4.4: Animation of Demand Simulation

leaves little room for improvement after a certain point. For Mach 3 aircraft, there is likely a similar floor due to aircraft being more expensive at Mach 3. More significant gains would be expected though if engines were closer in thrust class from the original optimization.

MIDAS Model Updates

Minimal changes were required to the MIDAS model in order to enable the "demand-based mixed fleet" scenario. For each route, an additional input was specified to denote what aircraft type is associated with it. In this scenario, the largest 2-12 markets are assigned to the first aircraft type (AC1), and the remaining are assigned to the second aircraft type. When considering route viability, there are no back-up options, so if the assigned aircraft type cannot service a route due to range limitations, that route is deemed not viable for service. A new input variable was also added that staggers aircraft development for a prescribed number of years to model a "leader-follower" scenario. This scenario also assumes that the aircraft are non-competing, where only one aircraft type is assigned per route, and that tech stops are not enabled. Figure 4.4 below represents a DBMF simulation, where the purple circles denote the operator using the first aircraft type, and the yellow circles denote the second aircraft. For this simulation, the first aircraft type was selected for transatlantic routes only.

5 - Updated Market Research

INTRODUCTION

Given the recent airline industry market volatility caused by the COVID-19 pandemic, SpaceWorks was tasked with collecting updated global economic data and commercial airline passenger market trends which drive the modeling and analysis efforts throughout this project. As of 4Q-2022, many of the unique effects that the pandemic had on the airline industry and global traffic levels have substantially subsided. This allowed for potentially more accurate estimates of airline passengers willingness to pay and long-term market growth forecasts. SpaceWorks also sought to conduct further research to verify accurate highspeed aircraft manufacturer design, development, test & evaluation (DDT&E) and highspeed airline cost assumptions. Information was gathered from publicly available data, targeted surveys, and subject matter expert interviews.

Long term airline industry market growth is one of the most important assumptions in the ROSETTA and MIDAS tools because of its significant effect on annual airline revenue. Global annual industry growth was conservatively estimated at 0.94%, however this estimate was sourced in 2020 when the industry was experiencing unprecedented disruption due to COVID-19, and it was unclear when and how fast recovery would occur. Both the International Air Transport Association (IATA) and Boeing annually publish 20-year passenger traffic growth forecasts. These forecasts typically differ in very small amounts (hundredths of a percent) and are widely utilized by airlines, investors, and the wider aviation community. Boeing's *Commercial Market Outlook*[5] (CMO) from 2022 was ultimately chosen given its immediate availability and the regional passenger traffic growth rates it provided. As of 2022, passenger traffic was expected to return to pre-pandemic levels by 2024 or 2025 which is in line with the original assumption made during the Deloitte study. Annual passenger traffic growth improved to 3.8% annually through 2031. Key highspeed regional growth forecasts such as North America-China and North America-Europe were 4.2% and 2.6% annually. This more recent and higher fidelity data improved the accuracy of our highspeed flight business case modeling and analysis tools.

An equally critical set of assumptions in the models are the airfare price elasticity curves. There are four unique curves which dictate willingness-to-pay versus percent market capture for economy and premium seat classes as well as transpacific and transatlantic routes. These curves were last updated in 2020 through a direct-to-consumer survey conducted by Deloitte. To update these curves, SpaceWorks chose an approach like Deloitte's and used SurveyMonkey to create and distribute a new survey. SurveyMonkey is an industry leading platform used by more than 300,000 organizations around the world in a variety of applications including market research, customer satisfaction, and employee engagement.

SURVEY DESIGN AND TARGET AUDIENCES

The survey design was highly scrutinized to maximize participation and ensure that it gathered the necessary data. Several rounds of testing were conducted both internally at SpaceWorks and with several participants from NASA. Skip logic was implemented to customize the survey questions based on whether the person was traveling for personal or business reasons. This was done to account for the fact that a personal traveler would know exactly how much they would be willing to pay, while a business traveler would be estimating how much their company would be willing to pay. Once participants were segmented by travel purpose and the typical class of seat they purchased, they were asked how much more they would be willing to pay to arrive at their destination at progressively shorter flight time intervals. This question was asked for both a transatlantic and a transpacific scenario. Participants provided their responses via a grid of drop-down menus with prescribed percent increases versus a normal subsonic ticket price. The same grid drop-down menu format was also utilized to determine same-day travel ticket price premiums by asking how much more the participant would be willing to pay for varying amounts of time to conduct their business and return home in a single day versus utilizing a subsonic red-eye flight. In addition to price elasticity, SpaceWorks sought to better understand the passenger preferences that might affect the optimal high-speed airplane design, how it is operated, and other high-speed market risks and opportunities. To this end, additional questions were added to gather data on passenger sensitivity to tech stops, inflight activity habits, cabin amenities, noise, emissions, and urgent travel frequency. Finally, to ensure that a representative sample of the flying public was surveyed, several demographic questions were asked such as age, gender, annual flight frequency, and annual household income. To reach our desired audience, SpaceWorks utilized SurveyMonkey's targeted response features to survey individual flyers.

Additionally, SpaceWorks partnered with the Global Business Travel Association (GBTA) to survey corporate travel managers in the United States. We hypothesized that corporate travel managers would provide a more accurate estimation of willingness-to-pay versus individual business travelers since they are more aware of a company's travel budget and approval processes. The survey was distributed to both audience sets in January and February of 2023. A total of 1028 responses were collected, 865 via SurveyMonkey and 163 via the GBTA. The gender, age, and household income of the respondents were found to generally align with US census data and previous surveys conducted by Airlines for America (A4A) and Ipsos. A summary of the SurveyMonkey respondent demographics along with trip frequency can be seen in Figure 5.1. It was found that the distribution of annual trip frequency among respondents roughly matched a recent A4A survey[6]. Most people fly between 1 and 5 trips per year or more than 9 times per year. Differences in the distributions are attributed to the relatively smaller sample size we surveyed and household income demographic differences. The distribution of travel purpose in our sample was relatively in line with the A4A survey as well, with 14% of SpaceWorks versus 9% of A4A respondents traveling for business reasons. Annual international/overseas and private/chartered trip frequency distributions can also be found in Appendix B.

[5]Boeing's Commercial Market Outlook (2022), https://cmo.boeing.com/

[6]Airlines for America, https://airlines.org/wp-content/uploads/2018/02/A4A-AirTravelSurvey-20Feb2018-FINAL.pdf

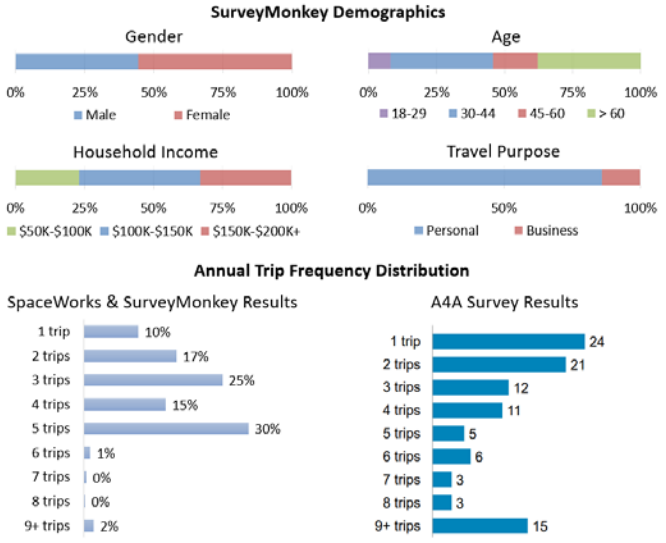

Figure 5.1: SurveyMonkey Demographics and Trip Frequency Comparison

DATA POST-PROCESSING

Several data clean-up stages were implemented over the course of processing the survey results to filter out an erroneous data. Surveys were reviewed for duration to ensure that an appropriate amount of time was spent to accurately answer the questions. The survey was designed to take approximately 7 minutes on average to complete. Therefore, we reasoned that any respondent who took less than 3 minutes to complete the survey was not providing valuable data. Abandoned surveys were respondents failed to answer all the questions were also filtered out. Finally, a small number of responses were illogical either due to misinterpretation of the question or obvious mistakes like individual miss-clicks when answering a question. These responses were either deleted or adjusted using critical judgement. Ultimately, 754 responses from SurveyMonkey and 99 responses from the GBTA were found to be practical to analyze.

PRICE ELASTICITY CURVE METHODOLOGY

Price elasticity data was separated by respondents' chosen seat class and travel purpose. The different seat classes represent a correspondingly different relative price baseline for comparison when analyzing additional willingness-to-pay for shorter flight time. Those that chose economy or premium economy contributed to an economy elasticity curve and those that chose business or first class would contribute to a premium elasticity curve. This was done for both the transatlantic, transpacific, and same-day travel scenario questions. Once separated, the data was then weighted based on annual trip frequency to create curves that better represented the flying public. For example, a person who takes nine or more trips per year represents a larger contribution to the overall commercial airline market than someone who only takes one trip per year. Responses were also weighted according to whether they were an individual personal traveler, small business traveler, or corporate business traveler because these respondent types also represent potential differences in willingness-to-pay. SurveyMonkey business travelers were used as a proxy for small business travelers and GBTA responses were used as a proxy for corporate travelers. The final weighted blend of data is seen in Figure 5.2. Finally, several equation forms and curve fitting tools including Excel, EasyFit, and JMP were investigated. We found that the curves with the best fit could be generated using Python. They intercept the x-axis to zero out demand which prevents extreme edge cases and produce slightly higher estimates at lower ticket prices when curve is steepest.

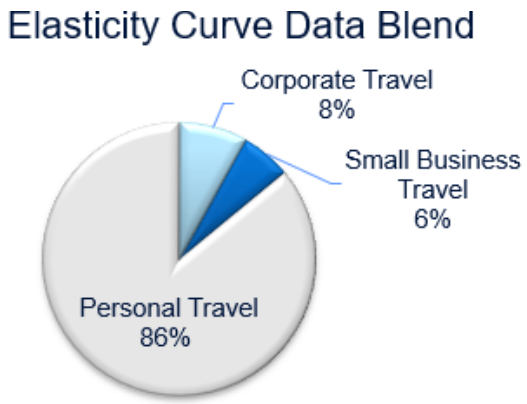

Figure 5.2: Elasticity Curve Data

PRICE ELASTICITY CURVE ANALYSIS AND RESULTS

Comparison of New Versus Old Curves

The "New" price elasticity curves indicated an overall reduction in willingness-to-pay versus the "Old" curves that were previously created by Deloitte in 2020. As seen in Figure 5.3, this decrease was most pronounced in the transatlantic market. The New curve shows that a high-speed airline which plans to capture 15% or 5% of the transatlantic economy market would need to lower their ticket price by approximately $170 and $2,700, respectively, for a Mach 2 flight. Similar ticket price decreases of $1,300 and $6,800 would be required to capture 40% or 20% of the premium market for a Mach 2 flight. Another point of note is that premium class seems less elastic at lower prices and much more elastic at higher prices. This is evidenced by the inflection point on the premium elasticity curve. This likely due to the increased granularity of survey answer options in these questions versus the previous survey. Answer options started with relatively small increases in price (e.g., 10%, 25%, 50% more…) that progressively increased to capture all possibilities (e.g., Double, 3, 4, 5, 6, 8, or 10 times as much).

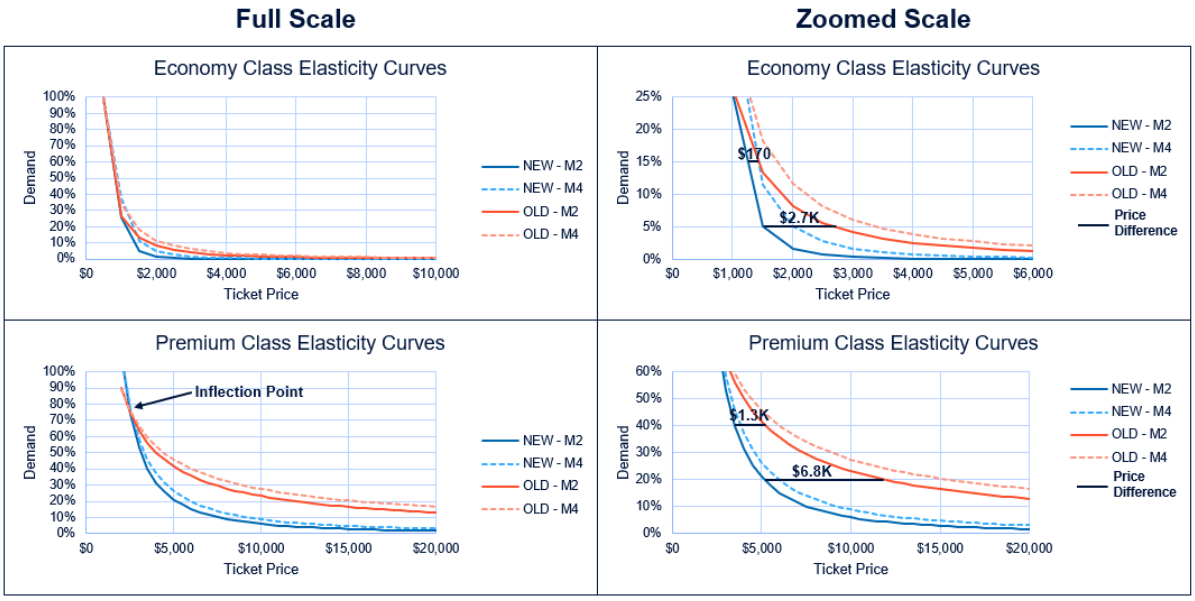

Figure 5.3: Comparison of Old and New Transatlantic Price Elasticity Curves

As seen in Figure 5.4, similar but less dramatic decreases were observed in the transpacific market. The New curve shows that a high-speed airline which plans to capture 15% or 5% of the transpacific economy market would need to lower their ticket price by approximately $83 and $917, respectively, for a Mach 2 flight. Similarly, there would be no change and a $4,800 decrease to capture 40% or 20% of the premium market for a Mach 2 flight. Inflection points in both the economy and premium curves were observed, again indicating less price elasticity at lower price points versus the Deloitte survey from 2020.

SpaceWorks explored several theories to explain the overall reduction in willingness-to-pay between our survey conducted in January 2023 and the Deloitte survey in September 2020. First was the known difference in household income between samples. The Deloitte survey excluded household income levels of less than $100K while the most recent survey excluded income levels of less than $50K. This was done to better align with the overall income levels of the traveling public. To understand what affect this set of $50K-$100K respondents had on our results, the curves were recomputed with those respondents removed. The results of which can be observed in Figure 5.5 for transatlantic travel. As shown by the very small differences between the blue and green curves, the overall change in willingness to pay could not be solely attributed to the difference in household income among our sample audiences.

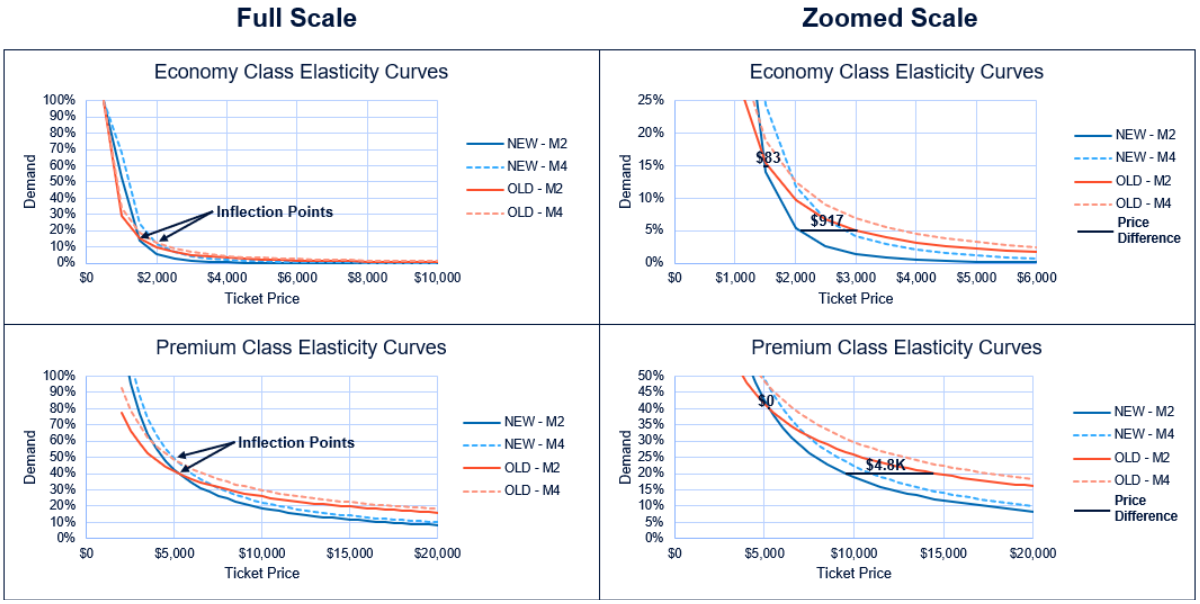

Figure 5.4: Comparison of Old and New Transpacific Price Elasticity Curves

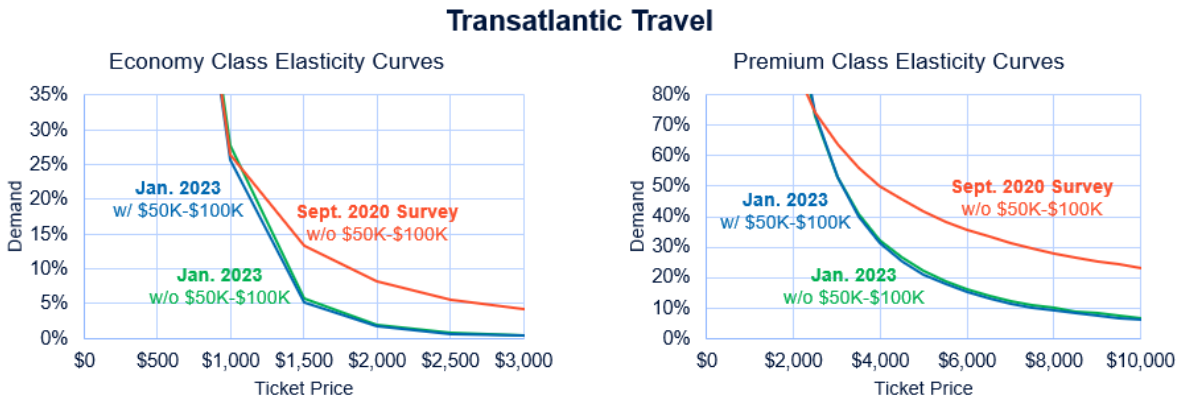

Figure 5.5: Sensitivity Analysis and Comparison of $50K-$100K Household Income Respondents

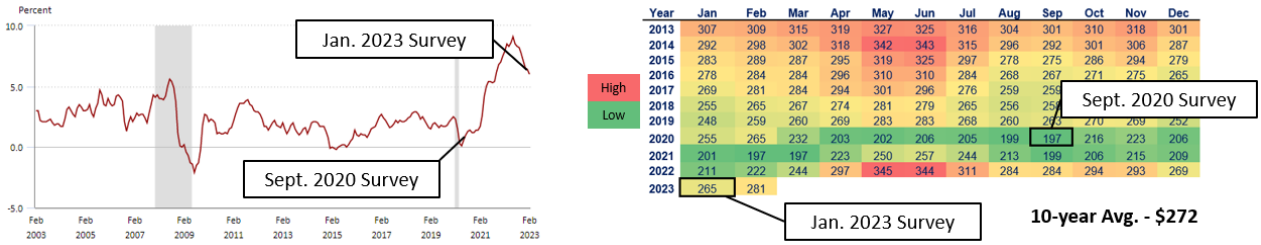

Year	Jan	Feb	Mar	Apr	May	Jun	Jul	Aug	Sep	Oct	Nov	Dec
2013	307	309	315	319	327	325	316	304	301	310	318	301
2014	292	298	302	318	342	343	315	296	292	301	306	287
2015	283	289	287	295	319	325	297	278	275	286	294	279
2016	278	284	284	296	310	310	284	268	267	271	275	265
2017	269	281	284	294	301	296	276	259	259	[illegible]	[illegible]	[illegible]
2018	255	265	267	274	281	279	265	256	259	[illegible]	[illegible]	[illegible]
2019	248	259	260	269	283	283	268	260	262	270	269	252
2020	255	265	232	203	202	206	205	199	197	216	223	206
2021	201	197	197	223	250	257	244	213	199	206	215	209
2022	211	222	244	297	345	344	311	284	284	294	293	269
2023	265	281										

Next, SpaceWorks explored whether the reduction in willingness-to-pay could be attributed to macroeconomic differences between the two time periods. The historical Consumer Price Index (CPI) and Average U.S. Air Fares gathered by the U.S. Department of Commerce were analyzed to answer this question. As seen in Figure 5.6, when the Deloitte survey was conducted, the CPI for all goods was 1.4%. Also, average U.S. air fares were $197, the lowest they had been since 2013. Purchasing power for airline tickets was at a 10-year high, 27% different from the 10-year average of $272. By comparison when the SpaceWorks survey was conducted, the CPI for all goods was 6.4% and the average airline fare was $265, reflecting only a 3% difference from the 10-year average. The price elasticity questions in our survey were based on how much more they would be willing to pay for a faster flight versus "today's typical ticket prices." A specific baseline ticket price was purposefully not provided to avoid individual anchoring bias. However, because of the relatively large differences in the average ticket price and other different macroeconomic factors occurring when each survey was distributed, it is very likely that these had significant influence on additional willingness-to-pay. As such, these factors are likely what caused the overall reduction in willingness-to-pay between the two surveys.

SAME-DAY TRAVEL PREMIUM PRICE ELASTICITY ANALYSIS AND RESULTS

A dedicated survey question was posed to determine what, if any, price premium exists for the unique ability to travel long distances, conduct business, and return the same day on a high-speed airplane. Respondents were asked approximately how much more they, or their company, would be willing to pay for varying amounts of time to conduct their business and return home the same day versus the same subsonic trip that included one redeye flight with next day arrival. An example of this scenario with two hours allowed to conduct business at the destination is outlined in Figure 5.7.

This data was used to generate same-day travel price elasticity curves for comparison with the general time saved value price elasticity curves that were described earlier in this report. As shown in Figure 5.8, the orange same-day travel curve tracks very closely to the blue general value curve and crosses it at about 38% market capture. This indicates that the price premium is mostly negligible. No additional premium was found to exist among the seat class and travel preference combinations besides a small premium observed in the $3,500-$9,500 ticket price range for business and first class travelers. Reasons for this include the fact that the value of same-day travel overlaps with the value of general time savings. Also, the value diminished by the additional time needed for customs, bag check/pick-up, and local transportation packed into a single day. High-speed flight and same-day travel passengers would likely highly value expedited services to reduce the time it takes for these activities.

Figure 5.7: Transatlantic Same-Day Travel Scenario with 2 hours to conduct business

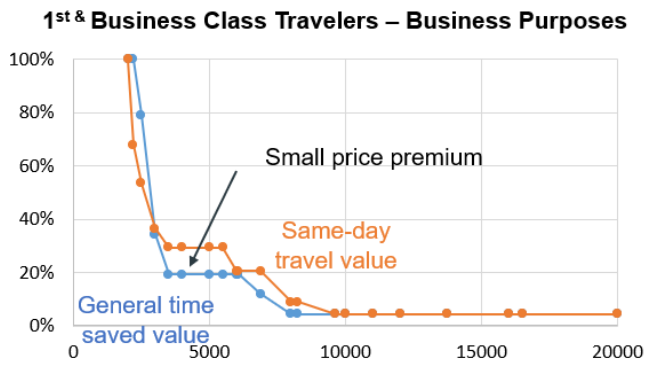

Activity	Hours - *Mach*			
Total Travel Day	**13**	**13**	**13**	**13**
Time to Conduct Business	2	3	4	5
Local Transportation	1	1	1	1
Customs/Bags	2	2	2	2
Flight time to destination	4	3.5	3	2.5
Flight time to origin	4	3.5	3	2.5
Required Flight Mach	*2.1*	*2.3*	*3.5*	*5.3*
Equivalent Time Saved	3.5	4.0	4.5	5.0

Figure 5.8: Transatlantic Same-Day Travel Price Premium Price Elasticity Comparison and Activity-Time Table

COMPARISON OF INDIVIDUAL BUSINESS TRAVELERS VERSUS CORPORATE TRAVEL MANAGERS

The blue and orange lines below display the relative price elasticity of corporate travel managers (GBTA) and individual business travelers that were surveyed via SurveyMonkey (SM) in the Transatlantic market. It was initially hypothesized that corporate travel managers would have an increased willingness to pay however this phenomenon was not observed. As seen in Figure 5.9, Corporate travel managers turned out to be more elastic or price sensitive, indicating a willingness-to-pay of $345 and $510 less than individual business travelers at the same market capture percentages in economy class for a Mach 2 flight. Similar differences of $570 and $1,800 were observed in the premium class.

As seen in Figure 5.10, the same trend can also be observed in the transpacific market. Corporate travel managers were again more elastic, indicating a willingness-to-pay of $310 and $740 less than individual business travelers at the same market capture percentages in economy class for a Mach 2 flight. Similar differences of $2,200 and $6,100 were observed in the premium class. Overall, difference in willingness-to-pay by corporate travel managers is likely due to their direct knowledge of their corresponding business travel budgets and limitations. Whereas individual business travelers would be able to only estimate their company's willingness to pay, and likely overestimate it.

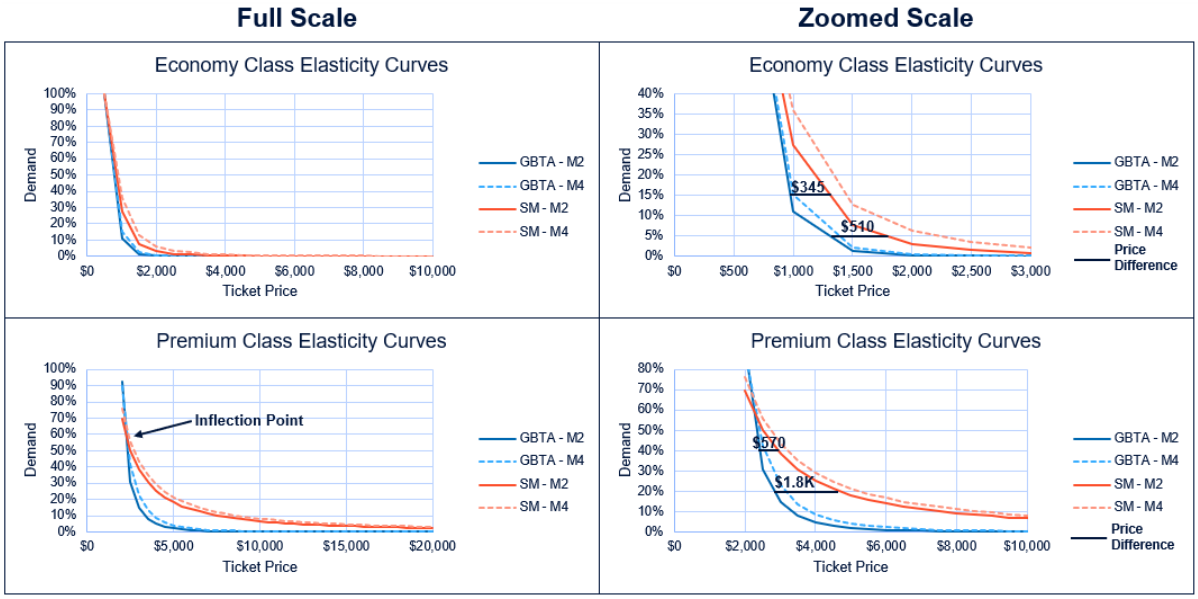

Figure 5.9: Comparison of Corporate Travel Managers versus Individual Business Travelers in the Transatlantic Market

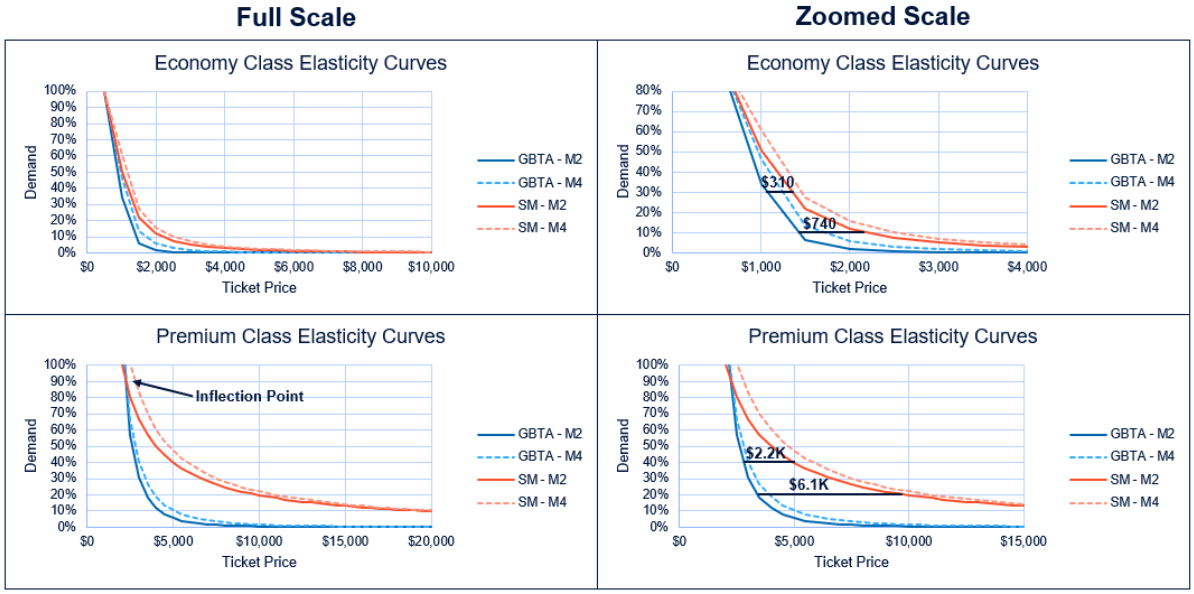

Figure 5.10: Comparison of Corporate Travel Managers versus Individual Business Travelers in the Transpacific Market

OTHER POSSIBLE SOURCES OF UNCERTAINTY AND BIAS

It is notoriously difficult to eliminate bias from a survey. While much effort was expended to reduce it, there are several sources of bias that may have still influenced the new price elasticity curves. Sampling bias occurs when the audience surveyed is not truly representative of the desired population. SurveyMonkey is an excellent tool for accessing much of the traveling public, but it is not designed to survey HNWI (High Net-Worth Individuals), who represent a distinct target market segment for high-speed flight. While this segment only represents approximately 1.2% of the global population, it is concentrated in many of the cities which contribute to the crown-jewel routes. As such, the price points which correspond to low single digit percentile market capture are likely higher than the new premium class elasticity curves reflect. A feasible path to better estimate the willingness-to-pay for this sub-segment would be to partner with a HNWI Market Research company such as Altiant, who can directly engage with this audience (this is significantly more expensive though).

Primacy bias is the tendency for respondents to pick one of the first options presented to them. As stated earlier, the drop-down list answer format was utilized to provide the answer options. As seen in Figure 5.11, these have the advantage of taking up less space on the screen but have the disadvantage in that all options may not be immediately visible at first sight (scrolling down may be required to see everything). This fact was noted midway through survey distribution and the format was changed to a Grid & Radio Button style. In addition to this, response options were not distributed evenly to provide granularity at lower price increases yet still cover the breadth of possible answers. As seen in Figure 5.11, out of 13 possible answer choices, ranging from "Nothing More" to "10 times as much," nearly half of the choices represented price increases of double or less. For these reasons, the true willingness to pay may be slightly higher than both the new economy and premium class elasticity curves reflect.

HIGH-SPEED PASSENGER INSIGHTS AND MARKET TRENDS

Several survey questions focused on understanding high-speed passenger preferences that may affect the airplane design or how it is operated. The results of these questions are provided in Figure 5.12. Matching interior seat configuration with the target flying population is very important for maximizing airline revenue. Results were mostly unsurprising regarding seat class preferences with 67% of passengers flying for personal reasons and only 31% of passengers flying for business reasons choosing economy class. An interesting point of note was that a much higher percentage of corporate travel managers (42%) chose the business seat class versus individual business passengers (24%). Meanwhile only 6% and 14% of business and personal passengers indicated that they typically sleep on international overseas flights. This indicates that features like lie-flat seats may not be as important on high-speed flights. A passenger's sensitivity to tech stops was of particular interest since they have the potential to extend the operational range of some smaller designs and create new city pairs. It was found that about 1/3 of respondents were sensitive in that they preferred to fly continuously without landing, even if that meant a longer flight on a slower plane. This held true for people traveling for personal or business reasons.

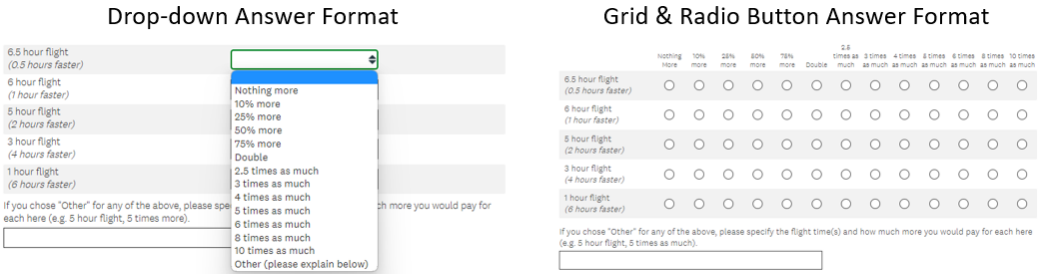

Figure 5.11: Drop-down and Grid & Rado Button Answer Formats

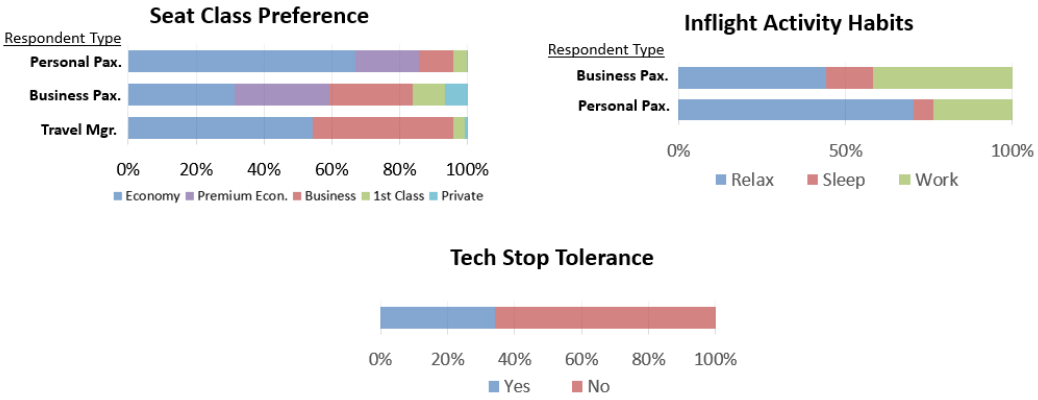

Figure 5.12: High-Speed Survey Passenger Preference Results

The time saving advantage of high-speed flight is magnified for longer distance routes, and it is well known that many factors like price, departure/arrival time, environmental impact and more contribute to a passenger's decision to purchase a ticket. To gain better insight into the relative value of these factors, respondents were asked to rank five of them from least important to most important when selecting a flight. The overall results from this question are provided in Figure 5.13 with a breakdown by respondent type in Appendix B. As expected, ticket price ranked the highest at a relative factor score of 1.0. Convenient Departure/Arrival schedules and Seat Assignment were equally valued at 0.7. Environmental Impact and Loyalty programs were both found to be worth about half as much as ticket price at 0.5. This aligns with typical US commercial passenger behavior in that most passengers are willing to make significant trade-offs to purchase a cheaper ticket. It was also found that travel managers place less relative value on seat assignment, environmental impact, and loyalty programs than individual passengers.

Additional questions attempted to gain further insight into risks and opportunities that might affect the commercial high-speed market. The results from these questions are provided in Figure 5.14. Respondents were asked how often they need to urgently travel on a transoceanic trip but don't even bother searching for a ticket because there is no flight that can physically get them there fast enough. It was found that 3% of personal passengers and 25% of business passengers encounter this scenario one to two times per year, with 12% of business passengers encountering it 3 or more times annually. This indicates that high-speed flight would grow the overall commercial air passenger market rather than just take market share from the subsonic segment.

Figure 5.13: Relative value of factors that contribute to ticket purchase

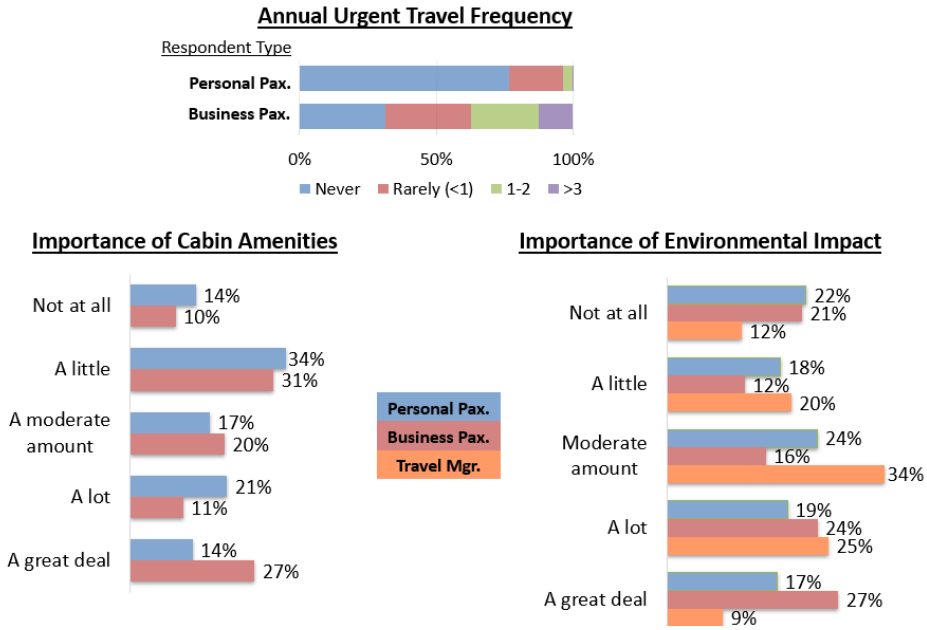

Figure 5.14: Relative value of factors that contribute to ticket purchase

High-speed aircraft will likely be relatively narrower and have less spacious interiors than today's long-haul subsonic aircraft. Business class seats will likely be standard, but headroom, aisle space, window views and cabin services will be more limited. A survey question was posed to understand how important these cabin amenities are to the market's willingness to adopt high-speed air travel. It was found that business travelers place more value on these cabin amenities. Notably, 27% of them stated that that these amenities mattered a great deal while only 14% of personal passengers answered as such.

Finally, high-speed aircraft will likely produce more noise at takeoff, a sonic boom during cruise, and significantly higher green-house gas emissions per passenger than a comparable subsonic aircraft. A specific question was posed to understand how much these environmental impacts would affect a person's decision to fly at high speeds versus taking a normal subsonic flight. A bell curve trend was prominent for personal passengers and corporate travel managers with 24% and 34% of them indicating that environmental impacts mattered a moderate amount. The same bell curve trend was noticeably not present among business passengers, with the largest percentage of them (27%) indicating that it mattered a great deal. This could be due to a divergence between how important an individual employee thinks environmental sustainability is to their company versus how important it is to company leadership, at least when it comes to travel policy.

MANUFACTURER DDT&E COST RESEARCH AND REVISIONS

Extensive research was conducted to review and verify the airplane program design, development, test, and evaluation costs (DDT&E) cost assumptions which drive the ROSETTA and MIDAS tools. SEER for Hardware (SEER-H) from Galorath, which is an industry leading mass-based parametric cost estimating tool was initially used to create the cost foundation. This was combined with additional publicly available data and interviews with subject matter experts to create the principal airframe manufacturer DDT&E cost estimating methodology. A review of the basic SEER-H financial and technical assumptions was conducted, and several inputs such as complexity and systems level costs (integration, assembly, testing, etc.) were adjusted to more conservative estimates. The entire estimate was also reevaluated using the latest SEER-H model version. This resulted in higher airframe development cost estimates.

Additional review of the cost estimate methodology found that certification was underestimated. Commercial aircraft certification is estimated to cost approximately $1M for a primary category aircraft, $25M for a general aviation aircraft and $100M or more for a commercial aircraft (Siemens, n.d.). The aggregate certification cost can reach as high as $1.0B depending on the effort required to meet existing and especially any unique compliance regulations. Program level certification cost is also very difficult to estimate because it depends on what percentage of tasks and assets are exclusively or partially attributed to certification. For example, the production and operation of test airplanes is extraordinarily expensive. However, these assets are used to conduct many internally driven quality tests as well as certification tests, so purely accounting for them under certification would be inaccurate. The existing cost estimate already accounted for (6) test airplane assets and additional supplementary costs however a gap was identified in the labor required to meet certification. As seen in Figure 5.15, a detailed, bottoms-up certification cost estimate was developed to identify the additional number of dedicated heads that would be needed to support certification. This approach and the results were discussed with a Senior Cost Estimation Manager from Boeing and a Senior Certification Manager of Advanced Design at The Spaceship Company, respectively. This contributed to an approximate $460M increase in DDT&E costs.

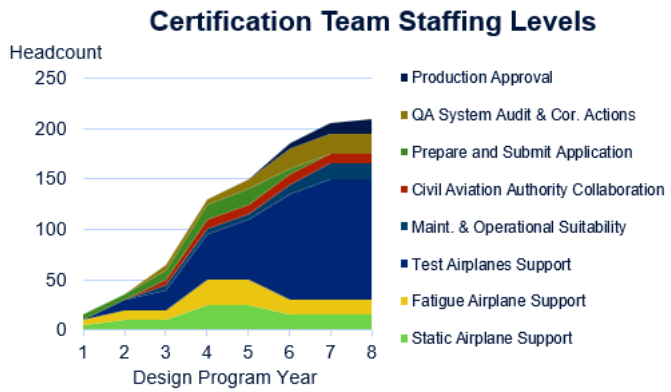

Figure 5.15: Example of Dedicated Certification Headcount

Further gap analysis was conducted to ensure any additional major cost catogries were accurately accounted for. Additional cost categories were updated including, interors/payloads, Auxilliary Power Unit (APU), and software development. Interiors/Payloads design cost was specifically increased to more accurately account for the expensive business class seats, monuments, and In-flight entertainment (IFE) systems. Being one of the most expensive components on the airplane besides the engine, the APU cost was also adjusted. Finally, sofware development costs were increased to reflect its growing contribution to the overall program costs of modern aircraft. As seen in Figure 5.16, the result of all of these efforts resulted in approximately $4.4B of additional program level DDT&E costs that have been included to the ROSETTA and MIDAS tools

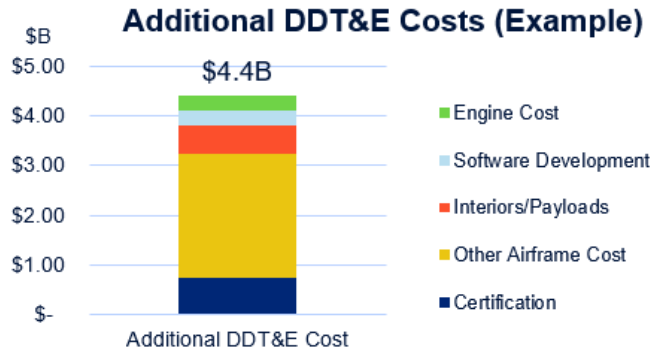

Figure 5.16: Example of Additional DDT&E Cost

With these additional costs, a parametric analysis was conducted to compare the DDT&E outputs of the ROSETTA and MIDAS tools with historical major commercial airplane program costs. These costs were plotted versus the corresponding airplane Maximum Takeoff Weight (MTOW) and found to be highly correlated with a correlation coefficient of 0.6. As seen in Figure 5.17, a trendline was also created. Mass is clearly a significant contributor to airplane cost however there are many other contributing factors such as technological complexity, design/infrastructure inheritance, and certification environment. For example, the 787 program represented a significant leap in technological and global supply chain complexity, drastically increasing its costs. The DDT&E costs of two example high-speed airplanes were modeled using the tools for comparison. As seen in Figure 5.17, both the X1 and X2 airplanes are within relatively small differences from the parametric cost trendline.

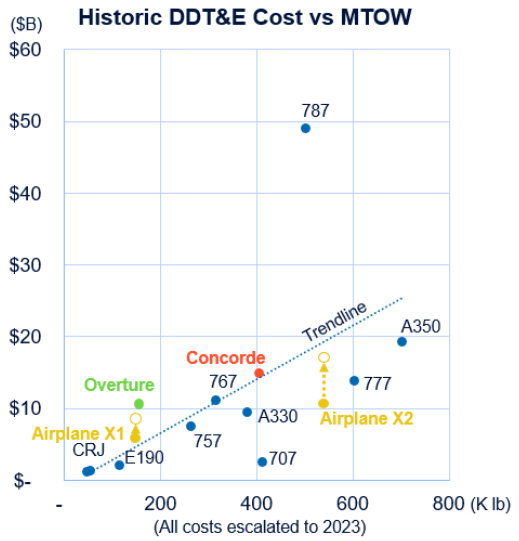

Airplane X1	Airplane X2
Mach = 2	Mach = 3
Range = 4000	Range = 5700
Capacity = 50 Pax Pax	Capacity = 50

Figure 5.17 Historical DDT&E Costs vs MTOW

AIRLINE COST RESEARCH AND REVISIONS

Airline costs and financing methodology was also extensively reviewed. No additional operating costs gap were identified however secondary capital expenditure costs associated with the launch of a new fleet model type, which any new airline or existing airline would incur, were found to be underestimated. These secondary capital expenditures are due to the spare parts, spare engines, and tooling which must be purchased, inventoried, and utilized to maintain airplane reliability. These costs are estimated to be approximately $31.6M for the first highspeed airplane purchase, with incremental and exponentially decaying expenses for each additional airplane.

Engine maintenance intervals or Time Between Overhaul (TBO) were also reviewed. Maintenance intervals in the ROSETTA and MIDAS tools were based on Concorde intervals and engine lifespan. These intervals along with typical commercial jet engine TBOs are provided in Table 5.1 and Table 5.2. Engine TBO for the Concorde, which flew at a cruise Mach of 2.04, was 25,000 flight hours. TBO for smaller subsonic jet engines can be as low as 3,500 flight hours while the Trent 700 TBO is as high as 36,00 flight hours. Meanwhile, Aerion's stated engine TBO target for their Mach 4+ commercial jet was 2,000 flight hours. NASA and GEAE Mach 1.5-2.0 studies over the last 20 years have also targeted similar TBOs ranging from 2,500 to 4,000 flight hours. These lower overhaul intervals for high-speed engines are due to the increased dynamic loads associated with a high-speed engine. Given these more conservative modern estimates and advances in modern engine materials, an engine TBO ranging from 2,000 to 7,000 hours, which varies with airplane cruise Mach, will provide a more accurate estimate for future studies. This updated estimate method was not incorporated into the trade studies provided in this report to allow for easier comparison with previous trade studies.

Table 5.1: Concorde Maintenance Intervals

Concorde Maintenance Intervals

Maintenance Check	Interval (flight hours)
A Check	210
B Check	420
C Check	1,680
D Check	12,000
Engine Overhaul	25,000

Table 5.2: Typical Commercial Jet Engine TBO

Typical Jet Engine TBOs

Engine Overhaul	Interval (flight hours)
Min	3,500
Average	20,000
Max	36,000
Aerion's stated goal	2,000
NASA Concept (2010)	2,500
GEAE Concept (2003)	4,000

The method of fleet financing was also reviewed. The modeling tools utilize a purchase and loan scenario however, as seen in Figure 5.18, the share of leased aircraft has grown significantly over the last few decades. Leasing aircraft is attractive to airlines for many reasons. It allows them to quickly respond to market dynamics, temporarily experiment with new routes, and eliminates an airplane's residual value risk. However, high-speed airplanes would not be attractive to lessors, as the high initial risk would likely cause cost prohibitive fees. The small asset value, niche market, and questionable long term residual value risk would also make them unappealing to lessors. As such, it was decided that the current purchase and loan methodology is the mostly likely financing scenario and so it would continue to be utilized in the models.

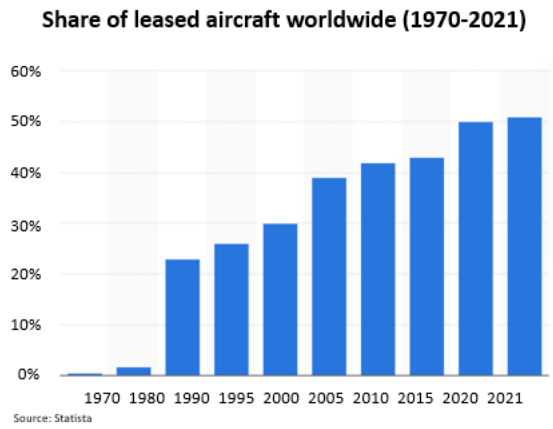

Figure 5.18: Historical Share of Leased Aircraft

AIRLINE PERFORMANCE METRIC RESEARCH AND REVISIONS

Several airline economic and business performance metrics were reviewed and implemented into the ROSETTA and MIDAS tools to allow for better comparisons with publicly available industry data. The airline optimization objective function was changed from Internal Rate of Return (IRR) to average Return on Invested Capital (ROIC). ROIC is calculated by dividing the net operating profit after tax by the invested capital over a specified period. It is the most appropriate and widely used benchmark metric for capital intensive businesses like airlines. After implementation, the average ROIC typically ranged from approximately 10% to 15%. Figure 5.19 provides the cumulative economic profit and average ROIC for multiple airlines from 2005-2015 for comparison. ROIC is also regularly reported on airline quarterly and annual financial reports.

Annual Revenue per Available Seat Mile (RASM) and Cost per Available Seat Mile (CASM) outputs were also integrated into the MIDAS model because they are the basic unit economics of the airline industry. An Available Seat Miles (ASM) represents the number of seats on an airplane multiplied by the distance flown. Annual revenue and operating cost are then divided by ASM to generate RASM and CASM, respectively. A hypothetical high-speed airline (20 pax airplanes, $4,400 average airfare, 3,300 nmi average route length) was analyzed for comparison with publicly available U.S. Department of Transportation Form 41 Data. The results of this analysis are provided in Figure 5.20. The large differences in RASM and CASM are due to the airline's unique operations and market. The 13x increase in RASM is primarily due to the approximate 10x increase in the ticket price versus the average airline which operates mostly economy class seats. The differences are also due to length and load factor variances. The 6x increase in CASM is due to 7x to 11x increases in fuel, maintenance, and crew labor CASMs, as well as smaller increases in other cost categories. These cost increases are expected given the higher fuel burn rates, maintenance costs, and crew costs for a relatively small high-speed airline.

Comparing RASM to CASM for the high-speed airline yields a profit per ASM of approximately $1.00 versus the $0.01 to $0.02 profit margins of subsonic airlines. This difference seems high, but it is important to remember two factors when considering this. First, the 25% IRR objective function is driving high returns on investment to account for the capital expenditures required for new airplane assets and the inherent risk of being a first mover in commercial high-speed flight. Second, the commercial high-speed flight industry is similar to other luxury industries in that it is high margin but low in volume. For example, the U.S. international airline industry consisted of 342.7 trillion ASMs in 2020. The average annual ASM for this hypothetical airline was 3.5 billion, or about 1% of the total US international market. In short, from the average airline operator's perspective, there is plenty of money to be made per ASM, but not a lot of ASM to capture, especially if there is competition.

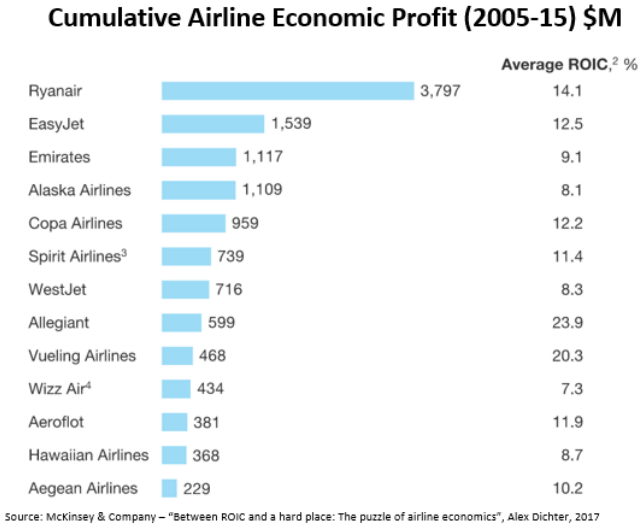

Figure 5.19: Cumulative Airline Economic Profit and ROIC

Figure 5.20: RASM and CASM Comparison with Form 41 Data

6 - Updated Alternative Fuels

BACKGROUND

An alternative fuel analysis was originally conducted in the base effort to evaluate the economic, technical, and environmental impact of utilizing alternative fuels such as sustainable aviation fuel (SAF), liquid methane (LNG), and liquid hydrogen (LH2). Following the acquisition of updated market research data, SpaceWorks reran the alternative fuel trade matrices with the new data and analyze how the results changed from the original study. Major changes included reduced demand based on price elasticity curves, increased market growth rates (regionalized), and increased development costs. Additional information regarding the updated market research can be found in the previous section (SECTION 5).

METHODOLOGY

Models were updated to incorporate the new market data from surveys, industry feedback, and additional independent research. Areas that were updated include price elasticity curves, market growth rates, development costs (airframe & engine), and spares/carrying costs.

- Price Elasticity Curves: derived from survey data through post processing. Replaced "Deloitte" price elasticity curves from 2020.
- Market Growth Rates: referenced Boeing's 2022-2042 airline market outlook to get regional growth rates. These values replaced the original global market growth rate.
- Airframe Development Costs: considered industry feedback and subsonic aircraft costs. Revisited original cost model and used latest version of tool (SEER-H by Galorath). Inputs were adjusted to reflect greater complexity and new CERs were generated.
- Engine Development Costs: Modified existing CER (thrust-based) by blending it with a mass-based CER. Both CERs derived from the same data set.
- Aircraft Development Costs: Certification & software costs were based on activities-based cost analysis, interviews with industry experts, and other public data.
- Spares/Carrying Costs: Based on fleet size and heuristics.

Given the greater granularity and confidence with the updated market data, SpaceWorks considered alternative KPMs such as RASM/CASM and ROIC that are more industry standard and offered a less conservative objective value for the operator that is more reflective of current airline expectations. Therefore, the operator objective changed from 25% IRR to 10% ROIC (scaled by 25%/10% for use in contours).

Besides the updates listed above, all other assumptions remained consistent with the original analysis. This includes utilizing fuel k-factors that annually adjusts fuel prices over time based on a weighted average of SME inputs. See Tables 6.1 & 6.2 below.

Sizing adjustments for aircraft using cryogenic fuel were also kept consistent with fuel being stored in pressurized, insulated, cylindrical tanks in the fuselage (Jet-A and SAF are partially stored in the wings). Hydrogen-fueled aircraft require multiple side-by-side tanks in the fuselage to maintain reasonable aspect ratios.

Tale 6.1: Fuel properties and economic factors

PROPERTY	JET-A	SAF (100%)	LNG	LH2
Density (lb/gal)	6.66	6.58	3.91	0.55
Storage Temp	-40ºC	-40ºC	-163ºC	-249ºC
Supersonic Isp* (s)	3000	3060	3470	7200
Price	$4.06/gal	$6.70/gal	$1.30/gal	$3.60/gal
DDT&E Impact	0% Inc.	2.5% Inc.	30% Inc.	60% Inc
TFU Impact	0% Inc.	2.5% Inc.	5% Inc.	10% Inc.

Tale 6.2: Fuel k-factors and assumed cumulative change in fuel prices overtime

Fuel k-factors	Directly Impacts	2030 (base year)	2035	2040	2045	2050	2055
Jet-A Prices	Fuel Cost	0%	9.0%	15.5%	27.5%	42.5%	53.0%
LNG Prices	Fuel Cost	0%	0.0%	2.5%	4.5%	8.0%	13.5%
SAF Prices	Fuel Cost	0%	-12.0%	-21.0%	-29.0%	-42.0%	-45.5%
LH2 Prices	Fuel Cost	0%	-5.5%	-8.0%	-16.0%	-28.0%	-62.0%

ANALYSIS / RESULTS

As expected, results were generally worse with the updated market data. Previously, large regions had achieved the objective function of 25% IRR. Now, a select, few cases barely reach that mark. Due to the updated price elasticity curves, operators are capturing less demand than before with the same ticket price. This means less aircraft production is required. However, with increased development costs, lower production rates make it more difficult to recoup development costs for the manufacturers, so aircraft prices are greatly increased. This feeds back to the operator who then has to acquire more expensive aircraft, resulting in higher ticket prices and lower demand for all stakeholders. This spiraling effect is more prominent with faster and/or long-ranged aircraft due to the higher costs to develop and produce the aircraft. With less demand at higher ticket prices, the high costs across the board become infeasible.

However, smaller aircraft, particularly in the Mach 1.5 to Mach 2 range, are less impacted and therefore, have the best economic performances across the trade space. Ticket prices were typically within the $4,500-$7,000 range depending on other design parameters. Production rates were also appreciably larger at these Mach numbers compared to the higher Mach cases, coming in at 350-550 aircraft over the course of operations. The best cases also gravitated towards 4,000-5,000 nmi design ranges, capturing most of the transatlantic routes but very little, if any, transpacific routes.

Comparing alternative fuels, SAF and LNG produced the best economic cases. SAF benefits from decreased fuel prices over time, becoming less expensive than Jet-A by 2045 due to increased global supply of SAF and economic/regulatory incentives to move away from Jet-A. LNG still benefits from its low price, enabling operators to keep ticket prices relatively low even with greater upfront costs. However, LNG still struggles when aircraft size becomes too large at higher Mach numbers and design ranges. This is due to LNG's lower density compared to Jet-A and SAF. Finally, aircraft using LH2 struggled to achieve a positive economic performance. The low density of LH2 means significantly more fuel is required, which drives up aircraft size (and therefore development and production costs) and operational fuel expenses. Similar to the original LH2 results, these results in Figures 6.1-3 below emphasize that LH2 aircraft are only practical at slow speeds and short ranges.

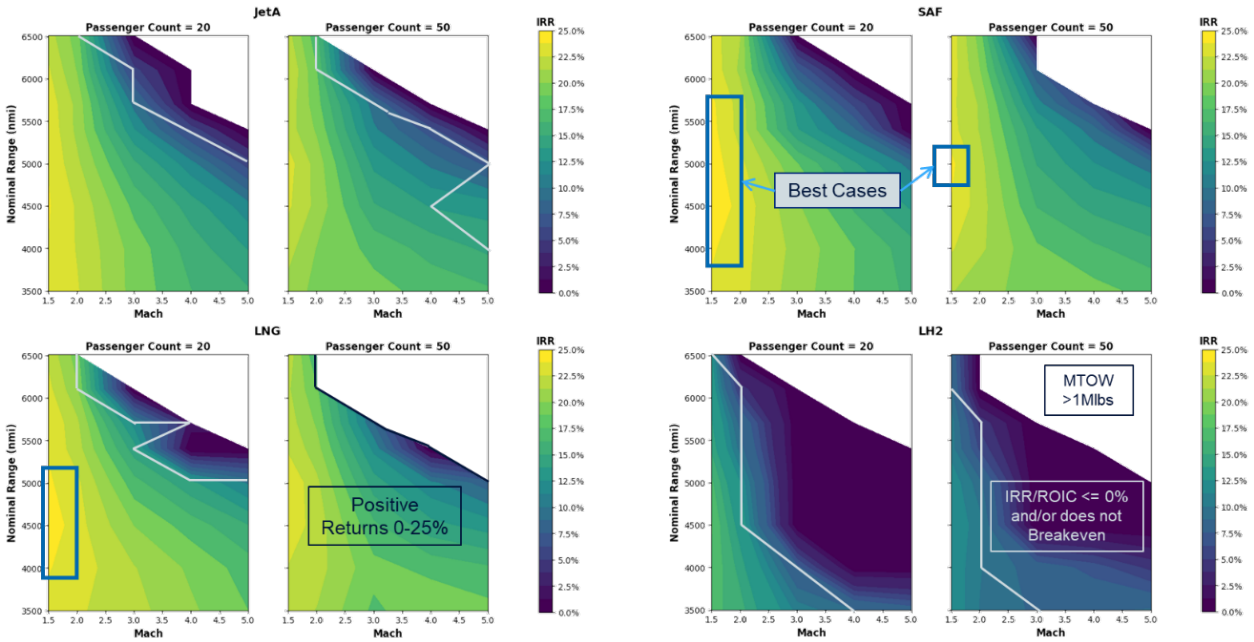

Figure 6.1 IRR/ROIC (operator's ROIC scaled by 25%/10% to be comparable with airframe and engine manufactures' targeted IRR value) – Blue boxes indicate regions of greatest market capture across all alternative fuel business cases

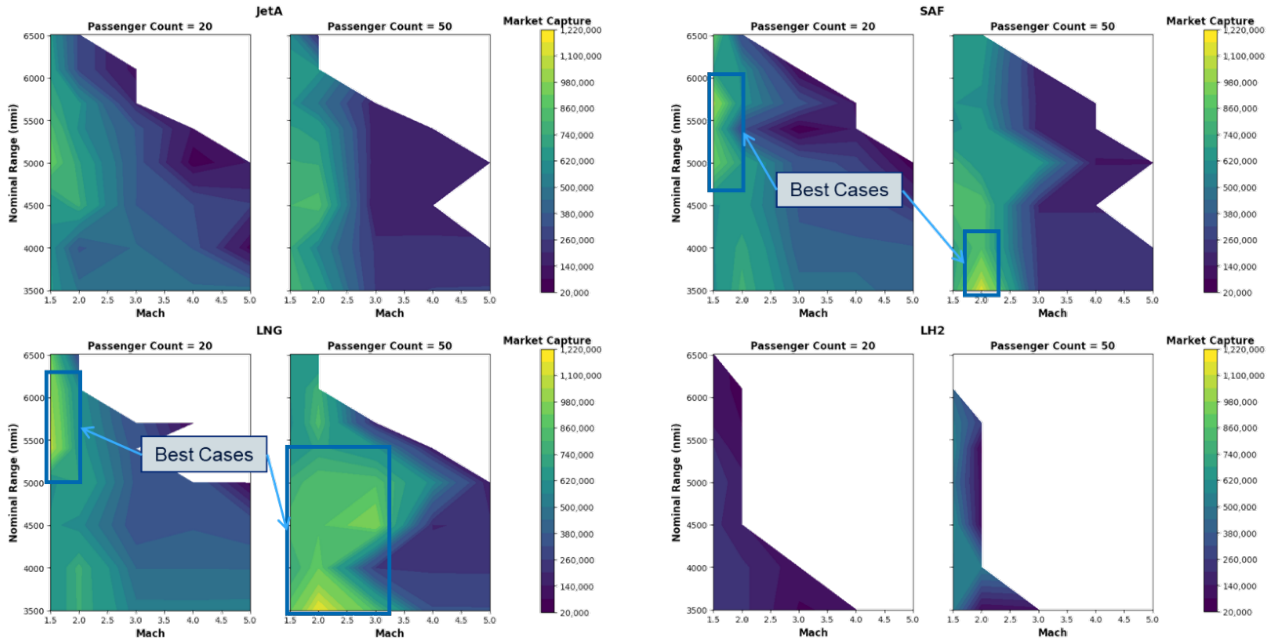

Figure 6.2: Market Capture – Blue boxes indicate regions of greatest market capture across all alternative fuel business cases

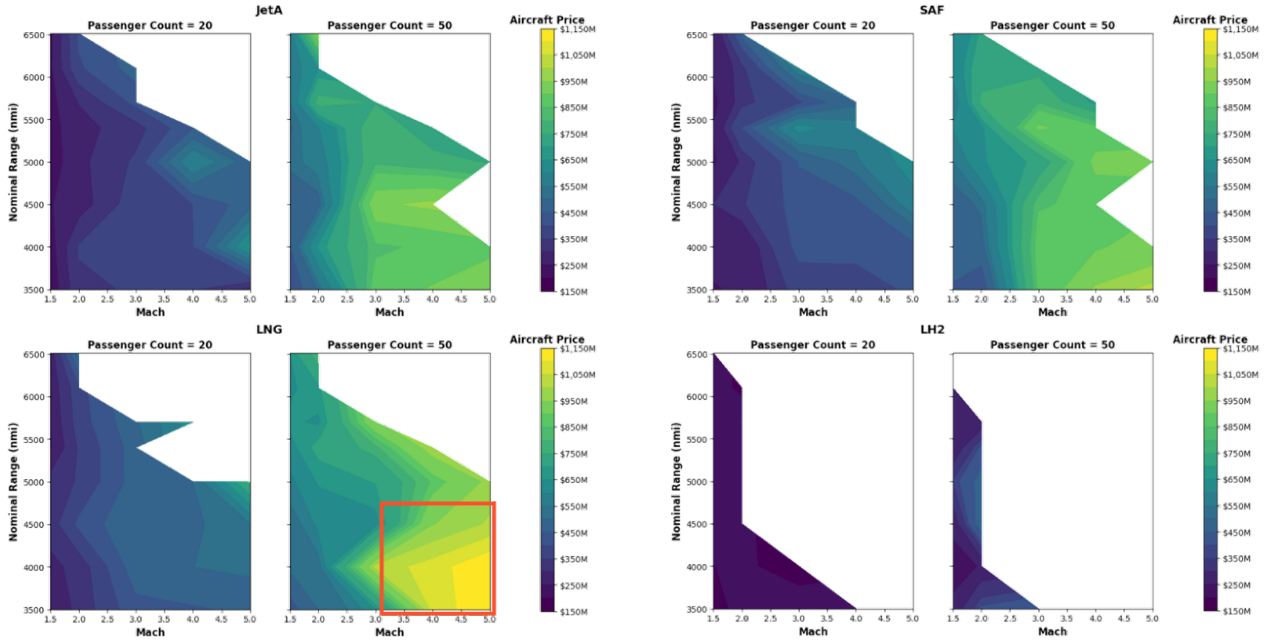

Figure 6.3 Aircraft Price – Red box indicates unique area of very LNG expensive aircraft indicative of LNG's lower fuel density that drives significant mass increases

7 - Flight Scheduling

OBJECTIVE

With the enhanced capabilities of MIDAS, greater fidelity can be incorporated into the model compared to the HSCA ROSETTA model. For that reason, the flight scheduling scenario was only implemented in MIDAS. Previously, aircraft were assumed to have a 16-hour window per day in which they could conduct flights. Total flights that an aircraft could complete in a day were determined based on flight time and turnaround time. Although this approach gives some consideration to the fact that there are inconvenient takeoff and arrival times by limiting flights to a 16-hour window, it does not account for time zone changes. This approach also implicitly assumes all aircraft on a single route take off and land at the same time.

With MIDAS, flight schedules can be generated that account for time zone changes and stagger take off and landings to be spread throughout the available window. This enables more realistic fleet utilization. SpaceWorks analyzed this impact as well as the impact of same-day, round-trip travel that's enabled by high-speed aircraft. This data was gathered through the market surveys (see SECTION 5).

METHODOLOGY

For this analysis, it was assumed that the operational window for aircraft starts at 6:00am and goes to 11:00pm (local times). Operational windows may start later, end earlier, and/or have a gap in the middle of the window for a given route. This reflects the ability of aircraft to take off and land within the bounds of each location's operational window. The bounds are based on scheduled flight times for subsonic aircraft and ensures aircraft don't takeoff or land at inconvenient hours of the night, respective to the local time. Ensuring aircraft aren't taking off or landing at night is not only significant for passengers but also for the local community given the fact that high-speed aircraft will likely generate more noise at, and near, airports compared to subsonic aircraft. An example of the operational windows for a route are shown below in Figure 7.1 for New York and London.

Furthermore, flights are scheduled to be evenly spaced throughout the operational window and must be at least 30 minutes apart. This last assumption effectively caps the number of aircraft that can serve a route and mainly applies to high density routes like New York to London. Smaller routes will typically have large intervals between flights to provide departures throughout the day. Market demand is evenly split between airports for a given route. Routes with a single flight per day will default to one aircraft initially. For the purposes of this analysis, the impact of Daylight Savings was not considered. Flights are assumed to occur for all days of the year. Model time keeping is with respect to Greenwich Mean Time (GMT). Finally, flight schedules are recalculated annually to capture market growth impacts when it justifies the need for new aircraft to meet demand.

Aircraft maintenance becomes more significant regarding fleet utilization as aircraft are unavailable for commercial service while in maintenance. Aircraft availability determines if a specific departure time for a scheduled flight is viable. To understand this impact, MIDAS tracks each aircraft's flight hours and uses this information to determine if the aircraft requires a maintenance check which include A-, B-, C-, D-checks and engine restorations. The frequency and duration of each scale based on Mach number and reference Concorde's time-between-overhaul times (see Table 5.1 in Section 5) as a basis of estimation. Through the flight schedule dashboard and demand tracking, fleet utilization can be evaluated daily or annually, respectively.

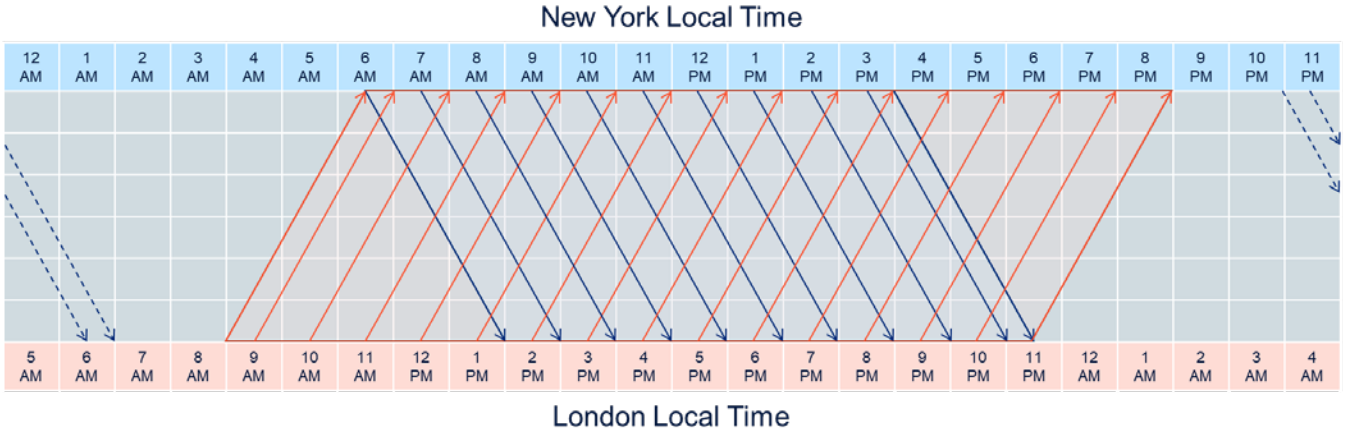

Figure 7.1 Operation Blocks for New York to London with Flight Scheduling for a Mach 2 Aircraft

Figure 7.2 below depicts the flight schedule dashboard that is generated for each route. The leftmost section visualizes the status for all the planes in that route. The box above the plane status section shows how many planes are currently available at each airport. These views are particularly helpful when trying to understand why certain flights were "missed", which is often due to some percentage of planes being in a maintenance check (e.g., an A-Check). The two panels in the middle represent the operational windows for each airport and possible flight departure times. Operational blocks are denoted with multiple colors, as seen by the blue and purple colors in the "JFK" panel. For this scenario, airports will have no more than two operational blocks. The red and green status badges highlight if a flight was successfully executed for a given window. Unsuccessful flights are tracked to determine an "unsatisfied demand" per route. Successful flights are added to the "Daily Flights" tracker, which is reset daily. For time zone keeping, the model is centrally tracking to Greenwich Mean Time (GMT) and each airport has a delta to GMT noted as an input. These deltas are used to ensure that flights do not take-off or land outside the required operational times for the airport's local time.

Additionally, with greater insight into fleet utilization, unsatisfied demand is being tracked as a metric to evaluate the effectiveness of a route's flight schedule. It reflects the percentage of passengers who are willing to pay for high-speed flight but could not do so because an aircraft was unavailable at a particular flight time. This metric is intended to help guide further model development to refine flight scheduling and fleet utilization. The lower this metric, the more revenue is generated. However, to reduce this metric to 0%, under-utilized aircraft will likely need to be available to ensure that there are no gaps in service. Therefore, there needs to be a balance between demand capture and aircraft acquisition. Figure 7.3 shows the unsatisfied demand for New York to Paris on an annual basis per airport. There is initially a large spike in unsatisfied demand as aircraft are gradually added to a route, which then decreases and eventually flattens out once enough aircraft are addressing that route. Spikes later on in the simulation are attributed to periods when a significant portion of the fleet are in maintenance checks, or when a significant portion begins to retire and there's a backlog of orders for new planes.

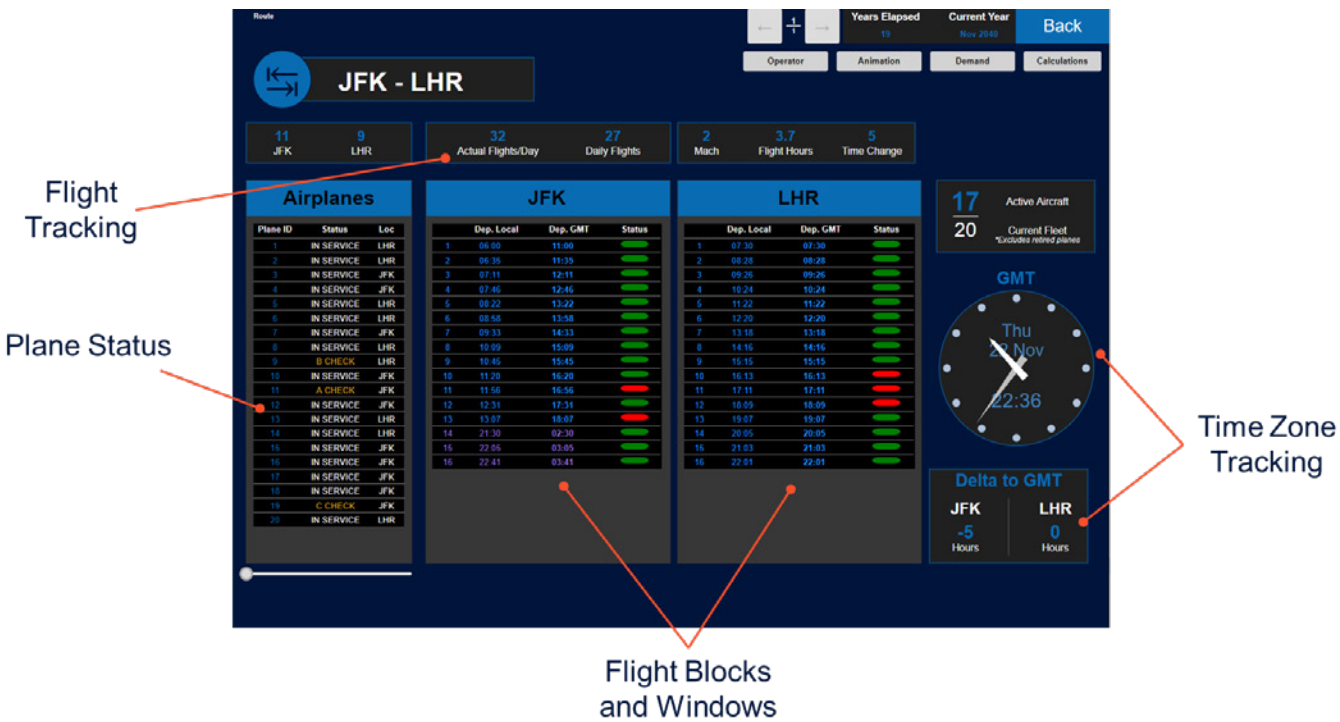

Figure 7.2 Flight Schedule Dashboard in MIDAS

Figure 7.3 Unsatisfied Demand Dashboard in MIDAS

ANALYSIS / RESULTS

The immediate impact of flight scheduling is that more aircraft are needed to satisfy demand. This has positive and negative impacts for the feedback loop between the operator and manufacturers. More aircraft mean higher production rates which lead to economies of scale, helping reduce the aircraft price. However, the operator must buy more aircraft which increases the necessary upfront costs. If economies of scale can't cancel out the financial impact of buying more aircraft, the operator will raise ticket prices to increase revenue per passenger and reduce overall demand to reduce the number of aircraft needed. Results indicate that this has a positive effect on the business cases for smaller and typically less expensive aircraft. Conversely, this has a negative effect on larger and more expensive aircraft.

For same-day, round-trip travel, there was an insignificant difference between the premium for same-day, round-trip travel versus the premium to fly at the speed that enables the same day travel. Because of this, no same-day travel premium was applied for this analysis since the impact would be negligible. However, there was slightly more interest from first class and private/charter passengers for this capability. Most likely, these passengers would opt to fly privately if the need for same day travel arose. Of note, some survey respondents wrote in answers that indicated they would rather spend more time at the international destination than spend a long day traveling back and forth. Also of note, corporate travel managers (GBTA) respondents were less interested in paying for same-day travel than the SurveyMonkey respondents, likely due to tighter budgets for corporate travel compared to high-net worth individuals.

Between the data and the sentiments expressed in the survey, there isn't any additional unique price premium, beyond the value of general time savings, for majority of the flying public. However, given the greater interest from first class and private/charter passengers, premiums for private flights doing same-day, round-trips may be more applicable. This market is likely much smaller compared to the commercial airline market but would likely have significantly higher margins, assuming that this market would mainly cater to politicians and large company executives.

8 - Competitive Market

OBJECTIVE

Using MIDAS, SpaceWorks evaluated three different scenarios that considered multiple operators to determine if competition helped the overall business case. The three scenarios are described as follows:

- Scenario #1 (Split-Even):
  - Two operators and one set of manufacturers
  - Each operator addresses 50% of the market and utilize the same aircraft
- Scenario #2 (Split-Weighted):
  - Two operators and two sets of manufacturers
  - One operator utilizes a short-range aircraft on viable routes while the other operator utilizes a long-range aircraft on viable routes but can compete on the short-range routes
- Scenario #3 (Crown Jewel):
  - Two operators and one set of manufacturers
  - One operator addresses “crown jewel” routes while the other operator addresses all other routes within range including those that can be reached with a tech stop

Each scenario will be covered in more detail in the Methodology section.

METHODOLOGY

During the initial development of MIDAS, the capability to model multiple operators was implemented in anticipation of competitive operator scenarios. Development for this task was therefore focused solely on enabling the desired behavior for each scenario. It should also be noted that the previous elasticity curves, market growth rates, development cost assumptions, and 25% IRR objective were used for this analysis to enable a more direct comparison with previous results.

For these competitive scenarios, additional information was added to various MIDAS dashboards to show the market split for the respective operations. Figures 8.1, 8.2, and 8.3 highlight these changes. In particular for Scenario #2, the market share for a given route for the second aircraft type may not match the requested operator market share if the first aircraft type is not able to service the same route, typically due to route distance constraints. In this case, that route becomes non-competing, and the second operator will get 100% of that market.

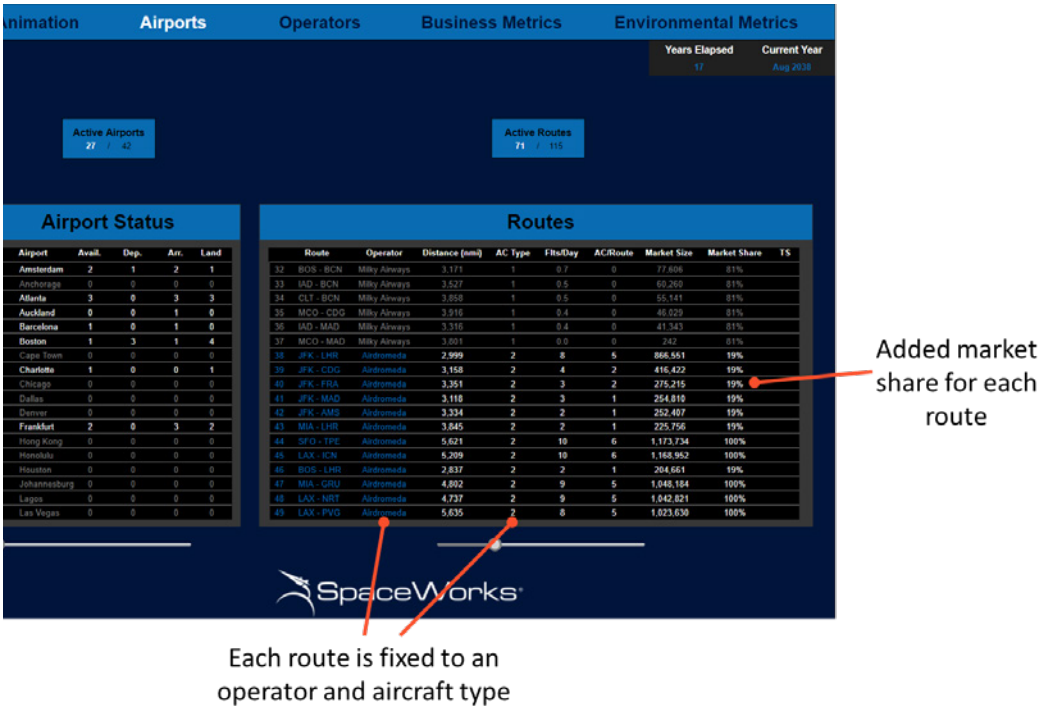

Figure 8.1: Airports and Routes Summary Dashboard for Competitive Markets

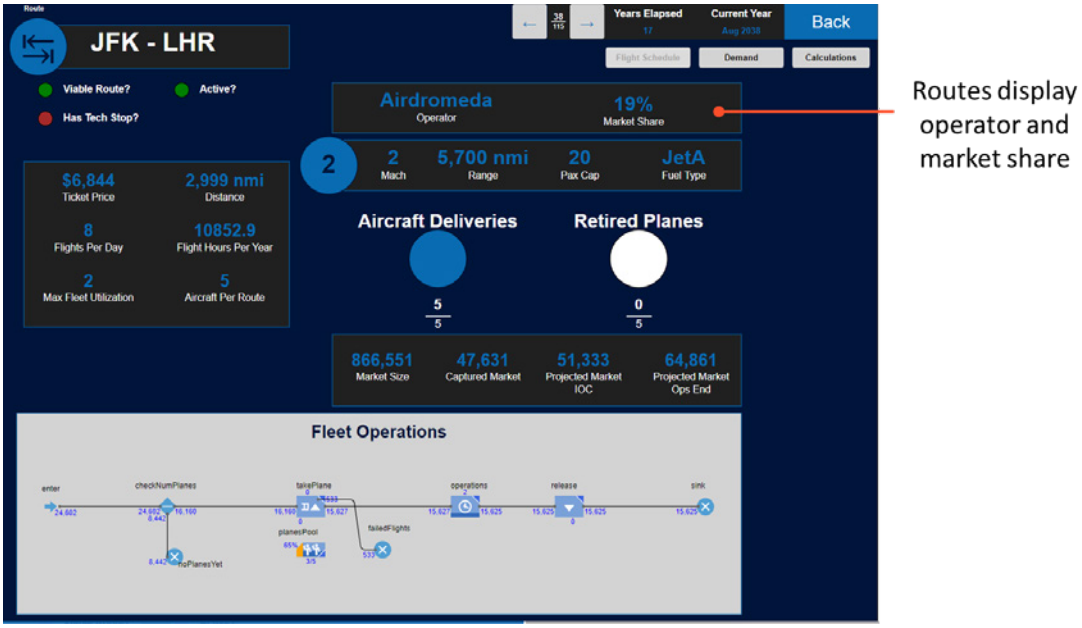

Routes display operator and market share

Figure 8.2: Route Dashboard for Competitive Markets

Input for operator market share displayed

Figure 8.3: Operator Dashboard for Competitive Markets

Scenario #1 – Split-Even

This first scenario analyzed a pure 50/50 demand split between operators as seen in Figure 8.4 below. With a single set of manufacturers, both operators utilized the same aircraft. To ensure market capture was the same for both operators, the same ticket price was used by both operators. Finally, in order for a route to be viable, there would need to be sufficient demand for at least two flights per day so that both operators would each have a flight. Previously, demand needed to be high enough for at least one flight per day for a route to be viable. Aircraft deliveries alternate between operators to keep their cash flows as equal as possible. Figure 8.5 below shows a snapshot of this scenario in MIDAS, where the silver planes represent the first operator's fleet, and the dark blue planes represent the second operator's fleet.

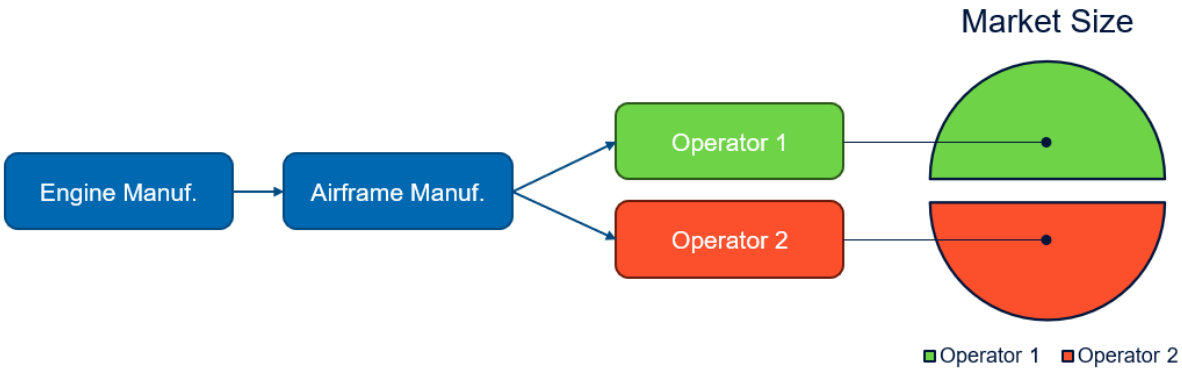

Figure 8.4: Notional flow chart of manufacturers, operators, and demand distribution for Scenario #1

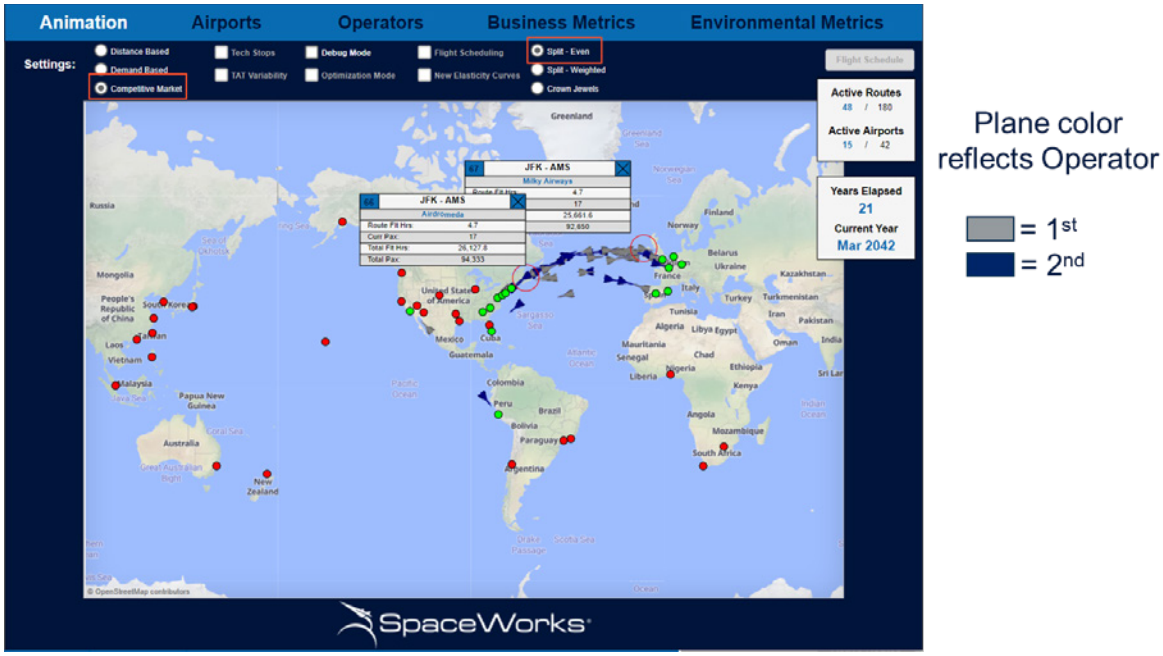

Figure 8.5: Scenario #1 (Split-Even) Simulation in MIDAS

Scenario #2 – Split-Weighted

Similar to the mixed fleet analyses, this scenario has two completely separate sets of manufacturers that produce a short-range aircraft and long-range aircraft, respectively. Operator 1 will utilize the short-range aircraft on viable routes while Operator 2 will utilize the long-range aircraft on viable routes. Operator 2 is also able to compete with Operator 1 on short-range routes as seen in Figure 8.6. Operator 1 is favored on short-range routes based on the following equation for route market share:

$$(PAX_sr + (PAX_sr + PAX_lr)*10\%) / (PAX_sr + PAX_lr)$$

PAX_sr and PAX_lr represent the passenger count for aircraft utilized by Operator 1 and Operator 2, respectively. The short-range aircraft (Operator 1) typically has a higher passenger count so it is usually favored. An additional boost is given to Operator 1 since it cannot address exclusive routes like Operator 2. However, if there isn't enough demand for the long-range aircraft to achieve one flight per day on that route, then the route is solely operated by the short-range aircraft.

For this scenario, only Mach 1.5 and Mach 2 aircraft were considered. The short-range aircraft had a design range of 4,000 nmi and passenger count of 50. Long-range aircraft had design ranges of either 5,700 nmi or 6,100 nmi with passenger counts of 20. Additional cases were run with short-range aircraft that had a passenger count of 40. Figure 8.7 below shows a snapshot of this scenario in MIDAS, where a combination of plane colors and highlights are used to denote the operator and aircraft type. This snapshot verifies the expected behavior that for Scenario #2 the first operator and shorter-range aircraft predominantly operate over transatlantic routes, which represent most of the shorter routes in the model.

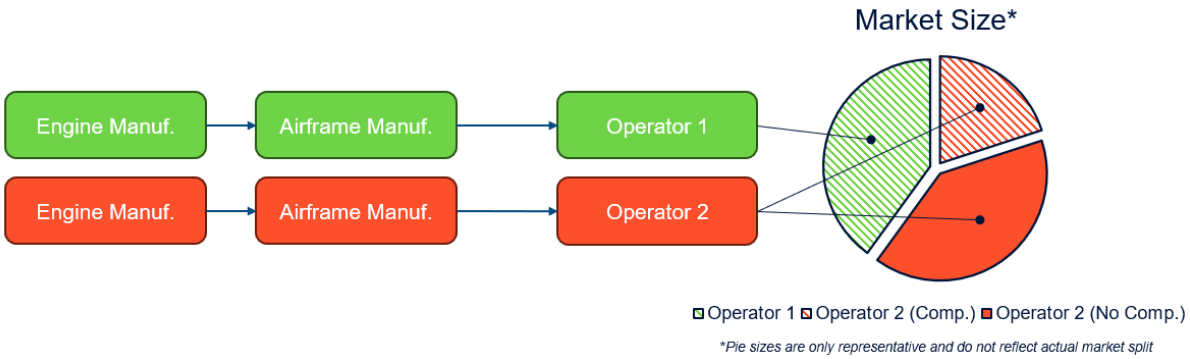

Figure 8.6: Notional flow chart of manufacturers, operators, and demand distribution for Scenario #2

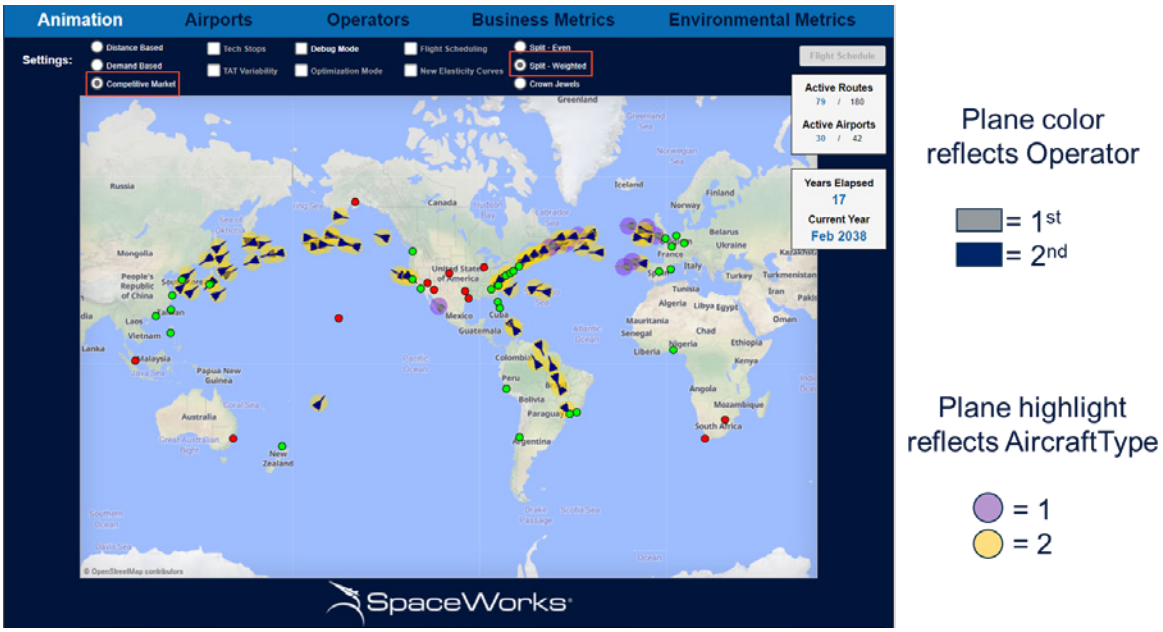

Figure 8.7: Scenario #2 (Split-Weighted) Simulation in MIDAS

Scenario #3 – Crown Jewels

This scenario has one set of manufacturers that produces a short-range aircraft used by both operators as seen in Figure 8.8. Operator 1 utilizes this aircraft on "Crown Jewel" routes, initially defined as the 10 routes within range of the aircraft that have the greatest demand and have New York or London as part of the city-pair. A sensitivity study was also conducted to look at different Crown Jewel route sets to evaluate the impact. Operator 2 utilizes the aircraft on all other viable routes including those reachable via tech stop. Aircraft are delivered to Operator 1 first since it is typically addressing the highest demand routes.

Figure 8.9 below shows a snapshot of this scenario in MIDAS, where the silver planes represent the first operator's fleet, and the dark blue planes represent the second operator's fleet. This snapshot verifies the expected behavior that the first operator and shorter-range aircraft only operate over transatlantic routes. It also verifies that the second operator has routes with tech stops enabled (Anchorage and Honolulu).

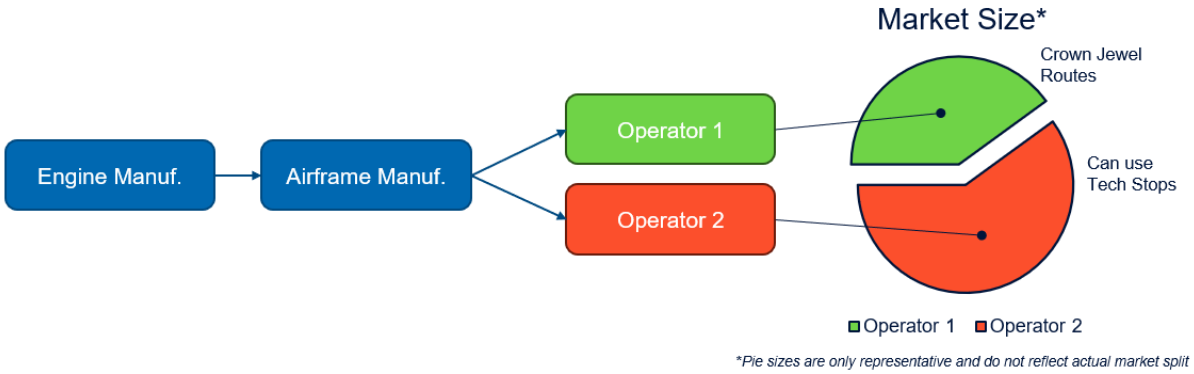

Figure 8.8: Notional flow chart of manufacturers, operators, and demand distribution for Scenario #3

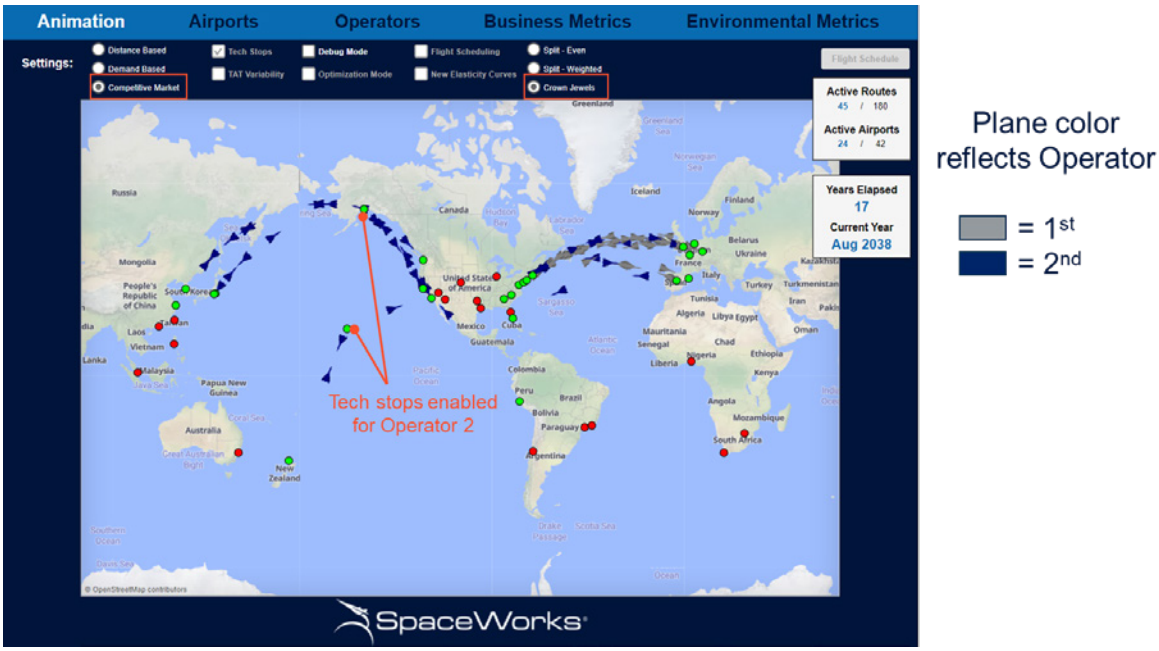

Figure 8.9: Scenario #3 (Crown Jewels) Simulation in MIDAS

ANALYSIS/RESULTS

The results from each scenario produced interesting take aways that may provide key guidance for industry applications. The rest of this section will go into more detail but at a high level, the following highlights the key findings of each scenario:

- Scenario #1: Results were similar but slightly degraded compared to single operator cases. However, max exposures were noticeably reduced for each operator.
- Scenario #2: Similar to mixed fleet analyses, splitting demand between manufacturers has an adverse impact on the entire business case which led to most results underachieving the objective.
- Scenario #3: This scenario produced the most promising results and took advantage of splitting the risk between operators and maximizing route/demand capture with tech stops.

Overall, results indicated that multiple operators helped reduce risk while still providing the manufacturers sufficient demand to achieve economies of scale (except for Scenario #2). Scenario #3 also highlights additional gains that can be realized by supplying the Crown Jewel operator with aircraft first then the other operator. This enables the low demand routes to grow more while the high demand routes are initially targeted.

For comparison, economic results for single operator results are included in Appendix C.

Scenario #1 – Split-Even Results

Given the more stringent criteria of requiring a route to have a minimum of two flights per day so that both operators had at least one flight per day led to slightly worse economic metrics depending on the case. On average, short-range aircraft cases addressed 3-4 routes less while long-range aircraft cases addressed about 6-11 routes less. This created a small domino effect. Ticket prices were slightly higher to compensate for the lost demand of smaller routes. The combination of less routes and higher ticket prices resulted in overall passenger demand decrease (average decrease of 250k annual passengers for short-range aircraft cases & 600k annual passengers for long-range aircraft cases). Less passenger demand results in fewer needed aircraft so manufacturers aren't achieving the same economies of scale. This ultimately leads to higher aircraft and engine prices. Short-range aircraft prices averaged an increase of 15% for aircraft and 10% for engines while long-range aircraft had an average price increase of 45% and 35%, respectively.

Table 8.1a: Economic results for Scenario #1, short-range aircraft; Ticket Price, Routes, and Max Exposure are the same for each Operator; Pax/Yr is the total annual passengers and Aircraft Sold is the total number of aircraft sold

Case	Min IRR	Mach	Range	Pax	Ticket Price	Aircraft Price	Aircraft Sold	Routes	Pax/Yr	Max Exp.
1001	25.5%	1.5	4,000	20	$4,200	$125M	479	28	2.3M	$3.1B
1002	25.3%	2	4,000	20	$4,700	$145M	480	28	2.2M	$3.8B
1003	25.1%	3	4,000	20	$8,900	$350M	157	21	0.87M	$3.0B
1004	23.4%	4	4,000	20	$9,900	$400M	158	21	0.90M	$3.8B
1005	20.9%	5	4,000	20	$11,800	$485M	152	21	0.71M	$3.4B
1006	25.9%	1.5	4,000	50	$3,000	$220M	273	23	3.0M	$3.2B
1007	25.1%	2	4,000	50	$4,900	$415M	155	20	1.9M	$3.4B
1008	23.5%	3	4,000	50	$7,100	$675M	90	16	1.1M	$3.6B
1009	22.2%	4	4,000	50	$9,400	$965M	68	13	0.73M	$3.1B
1010	20.4%	5	4,000	50	$10,800	$1.1B	68	12	0.66M	$4.3B

Table 8.1b: Economic results for Scenario #1, long-range aircraft

Case	Min IRR	Mach	Range	Pax	Ticket Price	Aircraft Price	Aircraft Sold	Routes	Pax/Yr	Max Exp.
1011	27.3%	1.5	6,510	20	$7,500	$200M	479	52	1.9M	$5.1B
1012	25.1%	2	6,100	20	$7,400	$195M	480	49	2.0M	$5.0B
1013	15.5%	3	5,700	20	$9,900	$335M	157	44	1.2M	$5.0B
1014	12.0%	4	5,400	20	$12,500	$490M	158	42	1.1M	$6.8B
1015	10.6%	5	5,000	20	$14,000	$565M	152	35	0.75M	$7.5B
1016	25.5%	1.5	6,510	50	$5,500	$410M	273	37	2.3M	$5.0B
1017	23.7%	2	6,100	50	$7,500	$570M	155	28	1.6M	$4.8B
1018	16.6%	3	5,700	50	$9,900	$820M	90	22	1.0M	$5.5B

Higher prices and lower demand compared to single operator business cases were more attributable to low Mach number (1.5-3) aircraft that were still able to achieve 25% IRR for their business cases, just not with the same parameters as single aircraft cases. Higher Mach number (3-5) aircraft cases were achieving IRRs 2-3% lower for short-range aircraft and 5-8% lower for long-range aircraft. These aircraft were therefore able to get away with seemingly improved metrics in other areas such as lower ticket prices and aircraft prices that aligned with the lowered returns. However, one metric was consistently and significantly lower for all cases: max exposure (far right column in Table 8.1), on the order of $2-4B. Max exposure reflects the greatest amount of investment or expenditure a company will realize on a project before positive cash flows start. Max exposure can be directly tied to risk for a project since the greater it is, the harder it is for a company to recoup those expenditures. Therefore, the reduction of max exposure for each operator makes their supersonic endeavors more palpable since they are risking less money.

This basic approach for multiple operators may be simplistic but it does indicate that operators can split the risk without significant impact to other metrics while still providing manufacturers with the production demand they need.

Scenario #2 – Split-Weighted Results

Results for Scenario #2 were consistently worse compared to single operator scenarios and no case achieved the 25% IRR objective. Although an operator or manufacturer may have been able to achieve a sufficient IRR individually in these cases, it came at the expense of the other stakeholders within its supply chain and thus, stakeholders were unable to collectively achieve the IRR objective. This is primarily driven by the manufacturers suffering from splitting the total addressable demand. Much like mixed fleet analyses, manufacturers splitting demand cannot achieve the same economies of scale as a manufacturer producing all the engines or aircraft. This leads to higher prices from the manufacturers that get passed on to the operators, and finally the passengers in the form of increased ticket prices. Ticket prices for the short-range aircraft were similar or higher than single operator cases in the $3,600-4,600 range while long-range aircraft were approximately $7,200 on average. Aircraft prices were $300M-$500M for short-range aircraft and $225M-$250M for long-range aircraft. Looking at the Aircraft Price and Aircraft sold columns in Table 8.2, the range of aircraft prices reflects the reduced production runs for each manufacturer with 100-200 short-range aircraft produced and 250-300 long-range aircraft produced.

Unlike Scenario #1, max exposures did not noticeably improve. Max exposures for Scenario #2 were in the $5-10B range (far right column in Table 8.2), or roughly double what was seen in Scenario #1. Given the relatively large max exposures and low production runs, this scenario lacks robustness and presents added risks that make these business cases less appealing.

Since this scenario is set up similarly to the mixed fleet analyses with two sets of manufacturers and therefore, two aircraft types, it is worth comparing the two trade studies with the main difference here being number of operators. In the DBMF analysis in Section 4, each aircraft was optimized to a range of IRR values and then paired to produce a business case with a combined IRR of 25% (with the short-range aircraft typically having a higher individual IRR and the long-range aircraft having a lower IRR). With competitive operators though, aircraft financials are not combined so both aircraft are striving for 25% IRR. This means that neither aircraft can rely on the other aircraft to either boost total profits or boost total demand. Both aircraft/operators must achieve sufficient returns on their own. Compared to a single mixed fleet operator, competitive operators lack the financial flexibility of the mixed fleet operator to drastically raise or lower tickets and still achieve the IRR objective, but the competitive operators at least ensure both aircraft are self-sufficient. Either way, more addressable market is needed to satisfy the manufacturers and enable more robust business cases.

To improve the economic metrics of Scenario #2, cases were run with short-range aircraft that had passenger counts of 40. This passenger count still maintains some efficiency for the large, transatlantic routes but it requires more aircraft to service the same sized market compared to aircraft with a max capacity of 50 passengers. This means more aircraft are produced by the manufacturer and at lower costs due to lower masses and/or economies of scale. This led to a 2-3% improvement in IRR for the few cases run with these parameters but still none could reach the 25% objective.

Table 8.2: Economic results for Scenario #2, 40 passenger aircraft business case results in italics; Blue is for the short-range aircraft, Orange is for the long-range aircraft

Case	Min IRR	Mach	Range	Pax	Ticket Price	Aircraft Price	Aircraft Sold	Routes	Pax/Yr	Max Exp.
2001	21.3%	1.5 | 1.5	4,000 | 6,100	50 | 20	$4,400 | $7,500	$450M | $255M	142 | 245	23 | 45	1.7M | 0.98M	$6.9B | $5.9B
2002	19.4%	1.5 | 1.5	4,000 | 5,700	50 | 20	$3,700 | $3,000	$330M | $95M	107 | 596	21 | 70	1.2M | 2.4M	$3.8B | $10.6B
2002-b	*22.8%*	*1.5 | 1.5*	*4,000 | 5,700*	*40 | 20*	*$4,500 | $6,900*	*$375M | $240M*	*158 | 264*	*24 | 49*	*1.6M | 1.1M*	*$6.6B | $6.8B*
2003	20.6%	1.5 | 2	4,000 | 6,100	50 | 20	$3,700 | $7,100	$295M | $230M	160 | 291	24 | 51	2.0M | 1.1M	$4.9B | $7.0B
2004	18.6%	1.5 | 2	4,000 | 5,700	50 | 20	$2,700 | $6,800	$300M | $255M	222 | 280	28 | 51	3.0M | 1.2M	$8.5B | $7.6B
2004-b	*21.5%*	*1.5 | 2*	*4,000 | 5,700*	*40 | 20*	*$4,300 | $6,400*	*$350M | $205M*	*172 | 343*	*26 | 54*	*1.7M | 1.4M*	*$6.6B | $7.2B*
2005	22.3%	2 | 1.5	4,000 | 6,100	50 | 20	$5,600 | $7,000	$520M | $250M	116 | 262	21 | 48	1.4M | 1.0M	$6.6B | $7.2B
2006	24.5%	2 | 1.5	4,000 | 5,700	50 | 20	$5,000 | $6,900	$440M | $230M	138 | 266	23 | 48	1.6M | 0.99M	$6.1B | $6.0B
2006-b	*22.3%*	*2 | 1.5*	*4,000 | 5,700*	*40 | 20*	*$5,000 | $6,800*	*$360M | $255M*	*159 | 265*	*24 | 50*	*1.5M | 1.1M*	*$6.1B | $7.5B*
2007	20.1%	2 | 2	4,000 | 6,100	50 | 20	$3,800 | $7,500	$355M | $255M	172 | 257	25 | 47	2.1M | 1.0M	$6.8B | $6.9B
2008	21.4%	2 | 2	4,000 | 5,700	50 | 20	$3,800 | $7,500	$355M | $225M	172 | 258	25 | 45	2.0M | 0.99M	$6.8B | $5.2B
2008-b	*23.0%*	*2 | 2*	*4,000 | 5,700*	*40 | 20*	*$3,800 | $6,300*	*$245M | $185M*	*236 | 361*	*28 | 54*	*2.1M | 1.4M*	*$5.4B | $6.7B*

Unless market sizes are increased, this scenario will not work well within the niche high-speed flight market. Broader adoption of high-speed aircraft would need to occur to enable higher production rates for multiple manufacturers.

Scenario #3 – Crown Jewels Results

Nearly all results for this scenario achieved the 25% IRR objective and produced some of the best results overall between the three scenarios analyzed. As seen in the second column of Table 8.3, only Mach 5 aircraft cases fell slightly short of the 25% IRR objective. Operator 1, which flew the Crown Jewel routes, had consistently lower ticket prices of about $1,000 for slower, smaller aircraft and about $2,700 for faster, larger aircraft when compared to Operator 2. Aircraft prices were also reasonable, ranging from ~$100M to $250M for the slower, smaller aircraft. The faster, larger aircraft were more expensive in the $400M to $1B range.

Compared to Scenario #1, these results reflect the difference in how demand is split. For Scenario #1, route demand is cut in half, effectively giving each operator a smaller route to address. Whereas for Scenario #3, specific routes are addressed by each operator, and in the case of the Crown Jewel operator, some of the largest routes. Because of this difference in splitting demand, Scenario #1 operators would benefit from a smaller passenger capacity aircraft more so than Scenario #3 operators since smaller aircraft would be better suited for the split routes and enable the operator to capture routes more easily based on the requirement that a route needs at least one flight per day per operator to be viable. This is also why Scenario #3 operators have higher tickets prices for Mach 1.5 & Mach 2, 20-pax aircraft; they are trying to reduce demand because 20 passenger aircraft are not optimal, specifically for the highest demand routes. On the other hand, the 50 pax, Mach 1.5 and 2 aircraft in Scenario #3 had the best business cases overall with the greatest market capture.

Mach 4 and Mach 5 aircraft business cases in Scenario #3 also performed well relative to the same aircraft in other cases. They benefitted the most from tech stops and the additional demand those extra routes offer. See SECTION 3 for details on the impact of enabling tech stops. Ticket and aircraft prices were still high but there was notable, albeit minor, improvement for these business case metrics.

Table 8.3: Economic results for Scenario #3; Blue is for the short-range aircraft, Orange if for the long-range aircraft

Case	Min IRR	Mach	Range	Pax	Ticket Price	Aircraft Price	Aircraft Sold	Routes	Pax/Yr	Max Exp.
3001	23.5%	1.5	4,000	20	$5,800 | $6,900	$110M	448	10 | 31	1.2M | 0.82M	$2.7B | $3.0B
3002	26.0%	2	4,000	20	$5,700 | $6,500	$165M	489	10 | 35	1.3M | 0.85M	$4.4B | $3.1B
3003	25.4%	3	4,000	20	$6,400 | $7,100	$190M	389	10 | 35	1.1M | 0.75M	$3.2B | $3.1B
3004	26.3%	4	4,000	20	$9,100 | $12,500	$410M	209	10 | 27	0.77M | 0.4M	$4.8B | $3.8B
3005	24.3%	5	4,000	20	$9,400 | $12,300	$410M	234	10 | 30	0.71M | 0.37M	$5.3B | $3.7B
3006	25.2%	1.5	4,000	50	$3,100 | $4,800	$265M	268	10 | 27	2.4M | 1.1M	$5.1B | $3.7B
3007	25.4%	2	4,000	50	$3,400 | $4,000	$235M	323	10 | 30	2.2M | 1.3M	$4.1B | $2.6B
3008	25.1%	3	4,000	50	$7,400 | $10,000	$785M	103	10 | 20	0.83M | 0.46M	$4.4B | $3.0B
3009	25.3%	4	4,000	50	$8,600 | $10,800	$865M	97	10 | 20	0.78M | 0.45M	$3.8B | $4.6B
3010	22.1%	5	4,000	50	$9,000 | $11,600	$1.0B	101	10 | 19	0.65M | 0.36M	$6.3B | $3.3B

Crown Jewel Route Sensitivity

Additional cases were run to evaluate the impact of modifying the set of Crown Jewel routes to see what improvements, if any, could be realized. Table 8.4 shows the variation in Crown Jewel routes and their respective case for the crown jewel route sensitivity study.

Original criteria for Crown Jewel routes required them to be within the design range of the aircraft, have an origin or destination at JFK or LHR, and have the greatest market size within that subset. The top 10 were selected as the original Crown Jewel routes. As a point of reference, the Mach 2, 50 pax, 4,000 nmi aircraft case was used as the baseline for the sensitivity analysis.

The first sensitivity reduced the set of Crown Jewel routes to the top 5, which coincidentally all have JFK as part of the city pair. This represents a "New York hub" scenario in a sense. The second sensitivity looks at an aircraft with a design range of 4,100 nmi. With tech stops, this adds four major routes each with annual passengers of 800k to 1M. This sensitivity uses the same original 10 Crown Jewel routes as the original baseline cases. The next sensitivity drops the JFK/LHR requirement to be a Crown Jewel route and reselects the top 10 eligible routes using the 4,100 nmi aircraft. Finally, the top 5 routes make up the Crown Jewel routes and use the 4,100 nmi aircraft. The results can be seen in the Table 8.5 below.

Table 8.4: Crown Jewel routes determined based on distance and market size with some consideration given to origin/destination in certain cases; Demand Rank is relative to all 90 routes in the model

Demand Ranking	Route	Size ('000s of People)	Original	Top 5 (3011)	4,100 – Original (3012)	4,100 – Top 10 (3013)	4,100 – Top 5 (3014)
1	JFK – LHR	3,970	♦ Crown Jewel ♦	♦ Crown Jewel ♦	♦ Crown Jewel ♦	♦ Crown Jewel ♦	♦ Crown Jewel ♦
2	JFK - CDG	1,910	♦ Crown Jewel ♦	♦ Crown Jewel ♦	♦ Crown Jewel ♦	♦ Crown Jewel ♦	♦ Crown Jewel ♦
3	JFK - FRA	1,260	♦ Crown Jewel ♦	♦ Crown Jewel ♦	♦ Crown Jewel ♦	♦ Crown Jewel ♦	♦ Crown Jewel ♦
4	JFK - MAD	1,170	♦ Crown Jewel ♦	♦ Crown Jewel ♦	♦ Crown Jewel ♦	♦ Crown Jewel ♦	♦ Crown Jewel ♦
5	JFK - AMS	1,160	♦ Crown Jewel ♦	♦ Crown Jewel ♦	♦ Crown Jewel ♦	♦ Crown Jewel ♦	♦ Crown Jewel ♦
6	MIA - LHR	1,040	♦ Crown Jewel ♦	Normal	♦ Crown Jewel ♦	♦ Crown Jewel ♦	Normal
12	BOS - LHR	940	♦ Crown Jewel ♦	Normal	♦ Crown Jewel ♦	♦ Crown Jewel ♦	Normal
16	ATL - CDG	830			Normal	♦ Crown Jewel ♦	Normal
17	IAD - LHR	820	♦ Crown Jewel ♦	Normal	♦ Crown Jewel ♦	♦ Crown Jewel ♦	Normal
19	ATL - AMS	790			Normal	♦ Crown Jewel ♦	Normal
21	JFK - BCN	720	♦ Crown Jewel ♦	Normal	♦ Crown Jewel ♦	Normal	Normal
23	MIA - MAD	700	Normal	Normal	Normal	Normal	Normal
24	IAD - FRA	600	Normal	Normal	Normal	Normal	Normal
25	ATL - LHR	600	♦ Crown Jewel ♦	Normal	♦ Crown Jewel ♦	Normal	Normal

Table 8.5: Crown Jewel route sensitivities; Sensitivity results below line (3011-3014); Subsonic ticket price based on one-way business class ticket for New York to London; Aircraft price based on Boeing 737

Case	Min IRR	Mach	Range	Pax	Ticket Price	Aircraft Price	Aircraft Sold	Routes	Pax/Yr	Max Exp.
Subsonic					$2,000*	~$100M*				
Single	25.0%	2	4,000	50	$4,300	$350M	143	22	2.2M	5.1B
3007	25.4%	2	4,000	50	$3,400 | $4,000	$235M	323	10 | 30	2.2M | 1.3M	4.1B | 2.6B
3011	25.9%	2	4,000	50	$3,000 | $3,700	$245M	332	5 | 36	1.8M | 2.0M	3.5B | 4.0B
3012	25.0%	2	4,100	50	$3,300 | $4,200	$280M	306	10 | 36	2.3M | 1.6M	5.4B | 4.2B
3013	25.3%	2	4,100	50	$3,700 | $5,500	$325M	264	10 | 32	2.1M | 1.2M	5.5B | 3.4B
3014	27.8%	2	4,100	50	$3,600 | $4,100	$250M	326	5 | 41	1.5M | 2.1M	2.9B | 5.2B

Except for case 3013, metrics were all relatively close to one another. Given that cases had different metrics over- or underperforming relative to the baseline, it's hard to say whether any one case was the best. However, this may indicate an overall robustness for this area of the trade space. There appears to be multiple, viable Crown Jewel solutions with relatively similar results. Furthermore, this highlights the potential of a leader-follower scenario for the industry: address the large, high demand routes first, allow low demand routes to grow, then start addressing when they've grown large enough.

Takeaways

The biggest advantage to having multiple operators buying from a single manufacturer is that operators can share the financial risk with reduced max exposures. However, this is a result of reduced demand so ticket prices can be reduced slightly to reflect the lower upfront costs but not drastically since revenue will also be reduced. A similar profit margin must be maintained to achieve the 25% IRR objective. Looking at industry, multiple operators are placing orders with Boom so this already seems to be a path forward, but it's still undetermined how the markets will be split between operators.

Scenario #3 – Crown Jewels had the most cases consistently and noticeably outperform single operator results. Given the route distributions and the aircraft delivery priority to the Crown Jewel operator, a leader-follower scenario appears to make the most sense. This enables smaller markets to develop more while larger markets can be immediately addressed. An interesting scenario that may be worth investigating is one where the Crown Jewel operator sells highly utilized aircraft to the secondary operator for use on less demanding routes. This would extend the life of those aircraft and enable the Crown Jewel operator to maintain a modern fleet for the highest demand routes. Additionally, it would make it easier for manufacturers to inject block upgrades into the market if the Crown Jewel operator needs new aircraft every few years. It would also enable the secondary operator to acquire part of their fleet at a discount, further reducing capital expenditures.
Scenario #1 – Split Even had slightly degraded business metrics due to the more stringent route requirements, but clearly identified the benefit of reduced max exposures. This presents a more palpable business proposition to operators since risk is significantly reduced. Scenario #2 – Split Weighted suffered from the same issues as mixed fleet analyses: insufficient production rates for both manufacturers that make it difficult for business cases to close. Reducing passenger count for the short-range aircraft helped but still not enough for cases to close. This scenario would be more feasible if a larger addressable market were available to justify two separate manufacturing companies. Alternatively, it would be worth evaluating scenarios that had a single set of manufacturers that produced two different aircraft and could leverage heritage/synergies between aircraft.

9 - Conclusions and Recommendations

The final conclusions and recommendations for the study reflect specific comments from this contract effort and then more comments based on all the work conducted since the start of the market study conducted with Deloitte (August 2020). Please refer to the Final Reports for the Deloitte study *(Commercial Hypersonic Transportation Market Study*[7]) and the base effort *(Life Cycle Cost Modeling of High-Speed Commercial Aircraft*[8]*)* for conclusions specific to the analyses conducted during those efforts.

KEY CONCLUSIONS

1. Aircraft with a maximum cruise Mach number of 1.5 take advantage of being less technically complex to enable lower costs and prices for development, production, acquisition, and operation. Therefore, even though the time savings for passengers aren't as significant over faster supersonic and hypersonic cruise-capable aircraft, the affordability of the aircraft enable greater market capture and production. This permits Mach 1.5 aircraft to be the least risky financially and provides greater robustness for the market within the range of aircraft design Mach numbers considered in this study

2. Tech stops provide a nice increase in the markets served for short-range aircraft (up to 4,500 nmi design range) and enable these aircraft to outperform the same aircraft without tech stops. This is especially true for aircraft operating at higher Mach numbers. However, the addition of the two, candidate tech stop locations we identified (Anchorage and Honolulu) for aircraft with design ranges up to 4,500 nmi flying transpacific routes still do not capture all of the routes and potential passenger traffic that would be available to a longer-range aircraft flying direct transpacific and other global routes. For example, a 6,500 nmi range aircraft, but with a relatively slower flight speed, would still out-perform the tech stop simulations based on slightly larger market capture and lower ticket prices.

3. After several iterations varying Mach number, range, passenger count, and route distribution, the demand-based mixed fleet operator model proved that it was a more efficient approach to operating multiple aircraft (as opposed to dividing routes exclusively by range). This reflected the economic benefits of a more balanced fleet utilization. However, the limitation with mixed fleet approaches is the reduced demand/production each manufacturer receives, at least for the set of routes included in this model. There is also pressure from the other direction though, as the operator can only take on so much financial risk and will aim to limit their acquisition costs.

4. Updated market data indicated that willingness-to-pay had decreased since the original market survey conducted in 2020. Given market conditions at the time of each survey, both sets of data are valid, but the latest dataset was taken during a period closer to the 10-year average based on CPI and other macroeconomic conditions. Subsequently, SpaceWorks believes this new set of elasticity curves are more representative of the market's true willingness-to-pay for high-speed flight.

5. An alternative fuels study was conducted previously and a reassessment was performed based on the new, updated market data and increased development costs for the aircraft. Except for some Mach 1.5 and Mach 2 cases, all cases failed to reach the required financial metrics. These updates also effectively eliminated any near-term business case for higher Mach aircraft (Mach 3-5) and discouraged longer design ranges in order to keep aircraft costs lower. However, there was a silver lining with SAF cases which outperformed most of their respective Jet-A cases. With smaller captured markets at the start of operations but faster market growth rates, the change in fuel price over time is more significant in later years of operation at which point SAF is assumed to be cheaper than Jet-A.

6. Flight scheduling indicated that a greater number of aircraft would be needed to address the same amount of passenger demand due to limitations on aircraft availability and operations with fixed flight departure times. This positively impacts manufacturers but to the detriment of the operators. Ultimately, this means smaller (cheaper) aircraft are preferred because the cost impacts are lower. From market research data, the willingness-to-pay for same-day, round-trip travel roughly aligned with willingness-to-pay for flights with similar time savings. Furthermore, time zone changes make same-day, round-trip travel on some routes infeasible. Therefore, only a marginal portion of the market would be willing to pay a premium for this capability.

7. Competitive operators benefitted from splitting the financial risk when buying from a single manufacture. Specifically, having two operators where one addresses Crown Jewel routes (i.e., New York - London) and the other operator addresses all other viable routes with the help of tech stops generated the best results. This approach enables both operators to capture significant demand and therefore provide the manufacturers with sufficient production rates.

8. Overall, the market for high-speed aircraft leaned toward slower, supersonic aircraft (Mach 1.5-2) that are able to address most, if not all, of the major transatlantic routes as well as some major transpacific ones. Given the total available market in our model, tech stops and multiple operators enable better business cases. If a larger market could be addressed via polar routes and/or overland routes, it would be more feasible to have multiple manufacturers that could then each achieve sufficient production rates and economies of scale. To that extent, environmental issues associated with high-speed aircraft need to first be addressed before this expanded market can be realized.

[7]Commercial Hypersonic Transportation Market Study, Deloitte; SpaceWorks Enterprises, Inc.; National Institute of Aerospace, 2021, https://ntrs.nasa.gov/citations/20210014711

[8]Life Cycle Cost Modeling of High-Speed Commercial Aircraft, SpaceWorks Enterprises, Inc., 2022, https://ntrs.nasa.gov/citations/20220015464

RECOMMENDATIONS

Based on the conclusions of this report, SpaceWorks recommends the following:

1. Continued investment in supersonic and hypersonic technology. Helping manufactures mitigate some of their upfront costs can enable cost savings across the board which enables operators to offer lower ticket prices and therefore, capture more of the market. As shown in the base effort, improving engine/propulsion technology had the greatest positive impact on business cases.

2. Consider “leader-follower” scenarios that initially enable large markets to be addressed while allowing more time for smaller markets to grow (or for high-speed flights overland to become viable, potentially). Alternatively, consider fielding a supersonic aircraft in the near-term (IOC in 5-10 years) and leverage the experience and technology there to eventually integrate hypersonic aircraft into commercial aviation in the long term (IOC in 15-20 years).

3. For hypersonic aircraft, consider a phased approach that starts with a lower design range (using tech stops if feasible) and target lower passenger capacity (~20 pax) to keep development and production costs as low as possible. As technology continues to mature, gradually ramp up capabilities (either through block upgrades or through the addition of new manufacturers).

4. Continued investment in SAF (short-term) with further exploration of LNG, LH2 and/or novel fuels (long-term) will help mitigate emissions. However, the supply of these alternative fuels needs to be orders of magnitude greater than any current and/or future production plans to address the commercial aviation market (and with LNG & LH2, the space launch market as well).

10 - Appendix

APPENDIX A: POLAR FLIGHTS AND RADIATION EXPOSURE

Although the main analysis for tech stops opted to exclude polar flights, additional analysis was conducted to explore the market potential as well as the effects of radiation at the higher altitudes and latitudes during flight.

Market Potential

The market potential only considered routes that connected cities/airports that already exist in the model. For example, the LAX-LHR was included while MDW-LHR (Chicago – London) was not. Two scenarios were considered when determining the potential markets: routes flown using a great circle path and routes that maintain flight mostly over water. The Figure A.1 below illustrates an example of a flight for JFK to ANC using the two scenarios. As stated in the Figure A.1, the yellow line indicates an assumed route that maintains flight mostly over water while the red line indicates the great circle route (the shortest distance between locations). The dotted lines just reflect that the line will move depending on the origin/destination while the solid line is assumed to be fixed for all potential east coast to Anchorage routes.

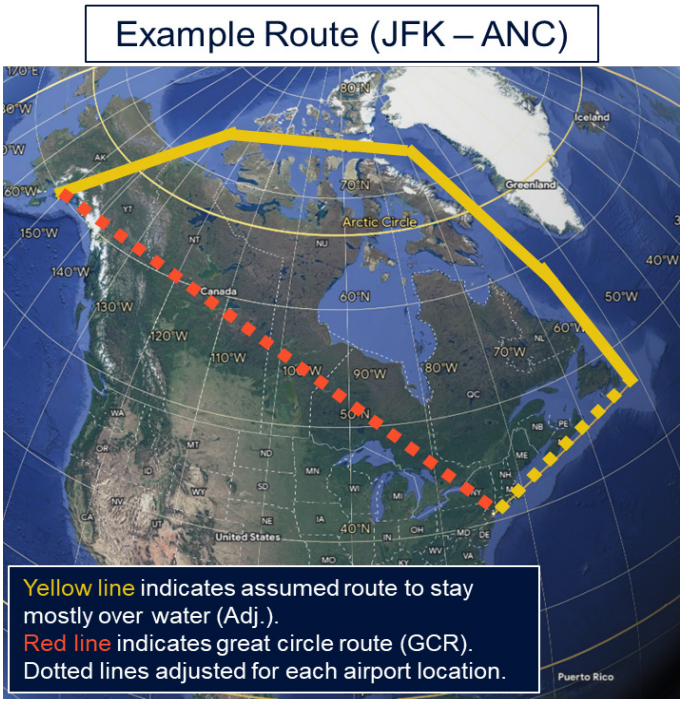

Figure A.1: Example polar route for New York – Anchorage; Dotted lines varied based on airport location while solid line was assumed to be fixed for calculating route distances

Based on the above approach, two sets of potential markets were determined. The Table A.1 captures the number of additional viable routes for a given aircraft design range and the corresponding market potential. Furthermore, the four biggest routes are included underneath for each potential market. The percentages represent how much that route contributes to the potential added market.

As can be seen in the table, significant potential markets exist for both scenarios with great circle routes adding ~31% to the existing 39.6M market in the model while flights over water add ~20%. Although great circle routes offer more potential, they are the less likely scenario given their flight paths are almost entirely overland. Unless quiet sonic booms are achieved and/or supersonic regulations overland are relaxed, then the full market potential from great circle routes will not be realized.

Table A.1: Market potential for aircraft of various design ranges; Considered potential if overland flight becomes feasible (Great Circle Routes) and mostly over water flights

	Great Circle Routes (GCR)			Water Overflight Only		
AC Design Ranges →	3,500 nmi	4,000 nmi	4,500 nmi	3,500 nmi	4,000 nmi	4,500 nmi
Possible Routes	11	23	36	0	6	18
Total Market Potential	+2.69M pax/yr	+7.60M pax/yr	+12.3M pax/yr	+0.0M pax/yr	+4.08M pax/yr	+7.84M pax/yr
Top Route	JFK–ICN (25%)	LAX–LHR (21%)	LAX–LHR (13%)	N/A	LAX–LHR (38%)	LAX–LHR (20%)
2nd	ATL–ICN (16%)	SFO–LHR (14%)	SFO–LHR (9%)	N/A	SFO–LHR (26%)	SFO–LHR (13%)
3rd	IAD–NRT (11%)	JFK–ICN (9%)	LAX–CDG (8%)	N/A	SEA–LHR (10%)	LAX–CDG (12%)
4th	JFK–NRT (10%)	ATL–ICN (6%)	JFK–ICN (6%)	N/A	SFO–AMS (10%)	SFO–FRA (8%)

Percentages based on route contribution to Total Market Potential for each range

Radiation

Given the altitude that high-speed aircraft are expected to fly at as well as the latitude at which most of the transatlantic and transpacific flights occur, additional research and analysis into the effects of radiation exposure were warranted. It should be noted that multiple studies have been conducted in this area and the research and analysis done here is based on only a couple of these studies, specifically ones that analyzed the effects of radiation at altitudes over 50,000 ft. NASA also has tools that can estimate radiation exposure at greater fidelity based on flight trajectory, durations at various altitudes, and point of time during a solar cycle.

For the purposes of the analysis conducted by SpaceWorks, a more basic radiation model was developed. Curves were derived from the ones in Figure A.2 *(Ionizing Radiation in Earth's Atmosphere and in Space Near Earth[9])* and reflect the effective dose rates from GCR, as related to geographic latitude at selected altitudes at 20º E longitude. Dose rates are for the mean solar activity from January 1958 through December 2008, and therefore, ignores fluctuations in radiation levels depending on solar cycles.

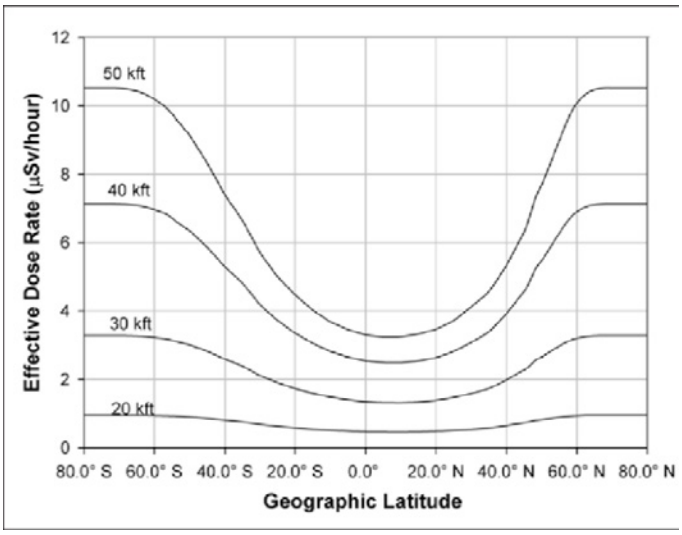

Figure A.2: *Effective Dose Rate from radiation at various altitudes (20-50 kft) and various latitudes (0º-80º) based on mean solar activity from January 1958 through December 2008; Fixed longitude at 20º East*

This also ignores the changes in the Geomagnetic Cutoff Rigidity at various longitudes. The Geomagnetic Cutoff Rigidity indicates the geomagnetic shielding provided by Earth's magnetic field against charged cosmic ray particles (or protection against cosmic radiation). In the Figure A.3 below, the red region indicates the greatest level of protection, and for reference, 20º E longitude roughly splits Africa down the middle.

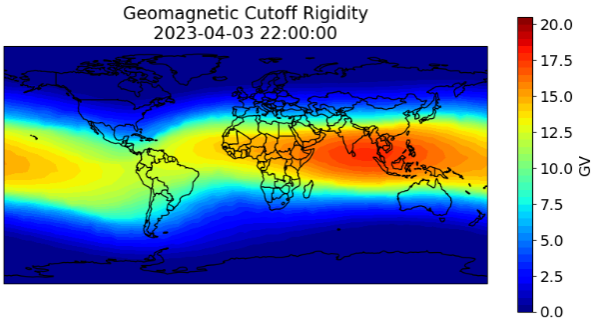

Figure A.3: *Geomagnetic Cutoff Rigidity indicates the level of protection provided by the Earth's geomagnetic shield against radiation; Red indicates the highest level of protection*

The curves derived from Figure A.2 only go up to 50,000 ft. Therefore, interpolation is used below this point while extrapolation is used for higher altitudes. However, based on another study *(Cosmic radiation dose measurements from the RaD-X flight campaign[10])*, radiation exposure appears to peak (also known as the Pfotzer maximum) at roughly 60,000 ft, declines to roughly 80% of peak at 100,000 ft, and then flattens out above 100,000 (see Figure A.4). Because of this, the following calculations are applied based on altitude:

- Interpolation/extrapolation of curves up to 60,000 ft (peak)
- Apply linear decay to 80% of peak value at 100,000 ft
- Constant value of 80% of peak above 100,000 ft

[9]Ionizing Radiation in Earth's Atmosphere and in Space Near Earth, 2011, https://www.researchgate.net/publication/235182886_Ionizing_Radiation_in_Earth's_Atmosphere_and_in_Space_Near_Earth

[10]Cosmic radiation dose measurements from the RaD-X flight campaign, 2016, https://agupubs.onlinelibrary.wiley.com/doi/10.1002/2016SW001407#pane-pcw-references

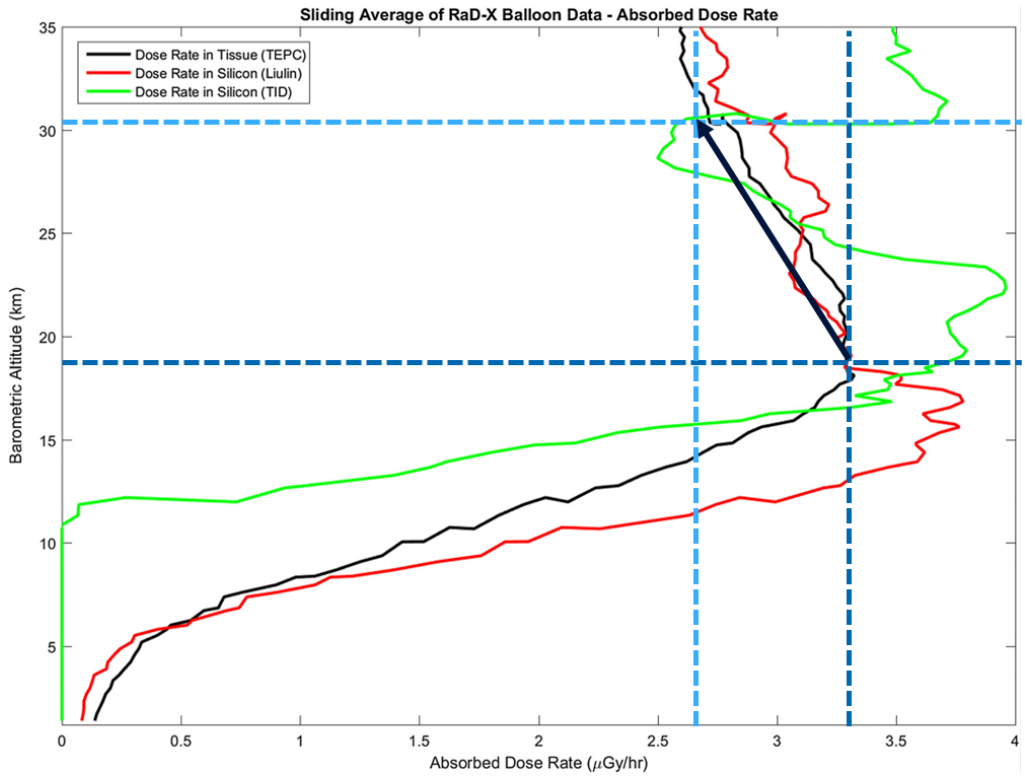

Figure A.4: Following the black line, data shows a peak around 60 kft that decays to ~80% of peak value around 100 kft

Using the final set of equations from above, several routes (determines average latitude) were analyzed at different Mach numbers (determines altitude). The combination of the two parameters determined cruise duration. The equations produced an effective dose rate (μSv/hr) for each flight. Multiplying that by cruise duration determined the total radiation exposure of the flight. The Table A.A below shows the results from this analysis.

Although the dose rates notably increased with Mach number, the higher speeds offset and reduced the total exposure for the flight. For reference, a member of the public should not exceed 1 mSv per year while the occupational dose limit should not exceed 20 mSv per year. Both values are recommended averages over 5-year period but the max occupational dose limit for a single year is 50 mSv. Acute radiation exposure was also considered but it only occurs at significantly higher dose rates, so it was determined to be a non-factor for an average flight here.

Given the results, high-speed flights have an advantage over subsonic aircraft in limiting radiation exposure for the flying public. However, operators should still be cognizant of variations in radiation exposure due to solar cycles as well as spikes in radiation due to solar storms or other cosmic events.

Table A.2: Comparison of radiation dose rates and total exposure for three routes (determines latitude and distance) being flown by three different aircraft (Mach determines altitude and cruise duration)

Route	Distance (nmi)	Average Latitude	Mach	Cruise Altitude (ft)	Time at Cruise (hr)	Effective Dose Rate (uSv/hr)	Total Effective Dose (uSv)
JFK – LHR	3,000	51 ° N	0.8	32,600	6.30	3.84	24.2
JFK – LHR	3,000	51 ° N	2	56,300	2.57	8.98	23.1
JFK – LHR	3,000	51 ° N	4	80,400	1.23	14.2	**17.5**
LAX – NRT	4,737	47 ° N	0.8	32,600	10.0	3.52	35.3
LAX – NRT	4,737	47 ° N	2	56,300	4.08	7.80	31.8
LAX – NRT	4,737	47 ° N	4	80,400	1.97	12.1	**23.9**
LAX – SYD	6,507	0 °	0.8	32,600	13.8	1.94	26.9
LAX – SYD	6,507	0 °	2	56,300	5.63	3.72	21.0
LAX - SYD	6,507	0 °	4	80,400	2.73	5.53	**15.1**

APPENDIX B: RELATIVE MARKET VALUE OF FACTORS BY RESPONDENT TYPE

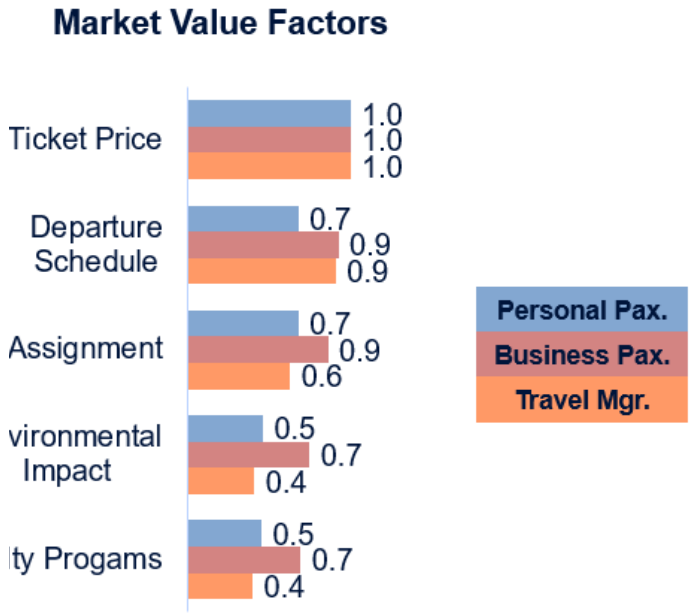

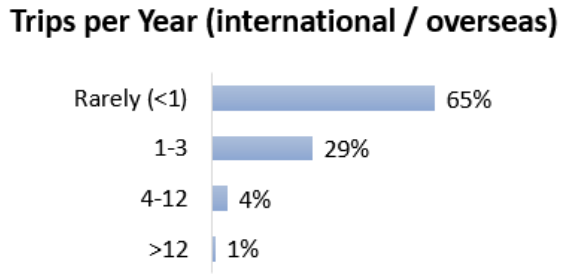

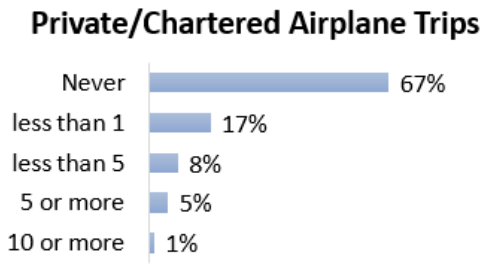

APPENDIX C: SINGLE AIRCRAFT ECONOMIC METRICS FOR COMPARISON TO COMPETITIVE OPERATOR SCENARIOS RESULTS

Case	Min IRR	Mach	Range	Pax	Ticket Price	Aircraft Price	Aircraft Sold	Routes	Pax/Yr	Max Exp.
0001	25.0%	1.5	4,000	20	$3,800	$105M	550	32	2.5M	$4.7B
0002	24.0%	2	4,000	20	$4,800	$170M	315	32	2.1M	$5.0B
0003	25.4%	3	4,000	20	$7,000	$260M	207	27	1.5M	$5.4B
0004	25.0%	4	4,000	20	$9,700	$360M	157	23	1.1M	$5.7B
0005	25.2%	5	4,000	20	$12,700	$450M	123	21	0.80M	$6.1B
0006	25.0%	1.5	4,000	50	$3,000	$185M	321	26	3.1M	$4.6B
0007	25.0%	2	4,000	50	$4,300	$355M	143	22	2.2M	$5.1B
0008	25.0%	3	4,000	50	$5,600	$470M	114	21	1.9M	$5.8B
0009	24.9%	4	4,000	50	$10,900	$910M	61	16	0.85M	$6.0B
0010	23.8%	5	4,000	50	$11,500	$985M	61	16	0.86M	$6.5B

Case	Min IRR	Mach	Range	Pax	Ticket Price	Aircraft Price	Aircraft Sold	Routes	Pax/Yr	Max Exp.
0011	25.2%	1.5	6,100	20	$5,800	$115M	739	61	2.9M	$7.0B
0012	25.1%	2	6,100	20	$7,600	$200M	359	54	2.1M	$6.8B
0013	22.7%	3	5,700	20	$15,400	$450M	122	30	0.63M	$6.0B
0014	19.3%	4	5,400	20	$15,500	$530M	101	27	0.61M	$5.8B
0015	18.7%	5	5,000	20	$15,000	$490M	120	29	0.73M	$6.4B
0016	25.0%	1.5	6,100	50	$4,200	$205M	426	50	3.7M	$7.3B
0017	25.0%	2	6,100	50	$8,200	$530M	131	31	1.5M	$7.1B
0018	21.5%	3	5,700	50	$11,600	$855M	81	24	1.1M	$7.5B
0019	18.8%	4	5,400	50	$11,600	$880M	81	24	1.1M	$7.7B
0020	18.5%	5	5,000	50	$12,200	$955M	74	22	1.0M	$7.8B

APPENDIX D: AIRCRAFT COST METRICS AND MARKET DATA

(SEE FOLLOWING PAGES)

Jet-A Aircraft

- Cost Metrics and Financials updated with latest Market Data

NASA SBIR Contract #80NSSC22C0008

Jet-A Matrix – Aircraft 1

ID: JTA.M1.5.P20.R4000.20230518

Mach 1.5
Cruise Speed

4,000 nmi
Max Range

20
Passenger Count

JetA
Fuel Type

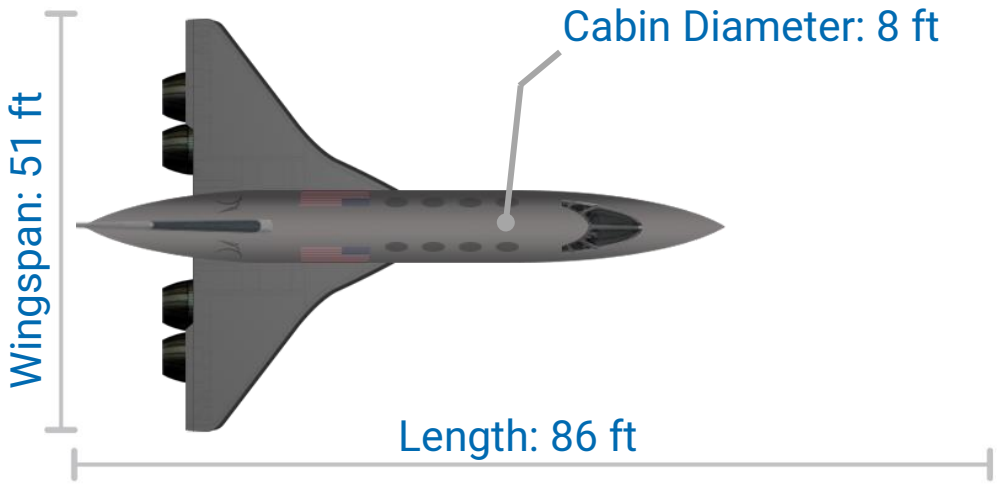

COST METRICS (FY21 USD)

DDT&E

$4.6B Airframe

$1.7B Engine

TFU

$57M Airframe

$4.5M Engine

ENVIRONMENTAL METRICS

89 EPNdB
Lateral Takeoff Noise

104 PNLdB
Sonic Boom

0.34 kg/km/pax
Emissions (CO_2e)

0.11 kg/km/pax
Fuel Consumption Rate

78,000 lbm
MTOW

36,200 lbm
MEW

4 x 7,400 lbf
Engine Thrust SLS

5.5 hours
Gate-to-Gate Time
at Max Range

44,400 ft
Cruise Altitude

6,000 ft
Bal. Field Length SL

AIRCRAFT NOTES

- Supersonic cruise condition L/D = 9.6
- Supersonic cruise condition Isp = 3991 s
- Vehicle propellant mass fraction (PMF) = 0.47
- Takeoff T/W = 0.375
- Effective Dose Rate (51º Lat.) = 6.4 μSv/hr

NASA SBIR Contract #80NSSC22C0008

Jet-A Matrix – Aircraft 1

SpaceWorks

NASA

ID: JTA.M1.5.P20.R4000.20230518

Key Inputs

Mach 1.5
Cruise Speed

4,000 nmi
Range

20
Passenger Count

JetA
Fuel Type

OPERATOR METRICS

$5,500-$6,200
Ticket Price

0.6M
Pax/Year

24
Routes Captured

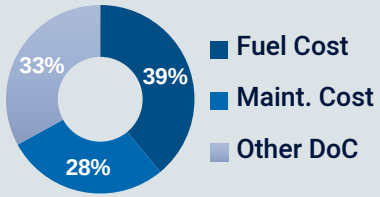

MANUFACTURER METRICS

$225M
Aircraft Price

$177M
Airframe Price

$12M x4
Engine Price

317
Aircraft Sold

KEY EVENTS & DATES

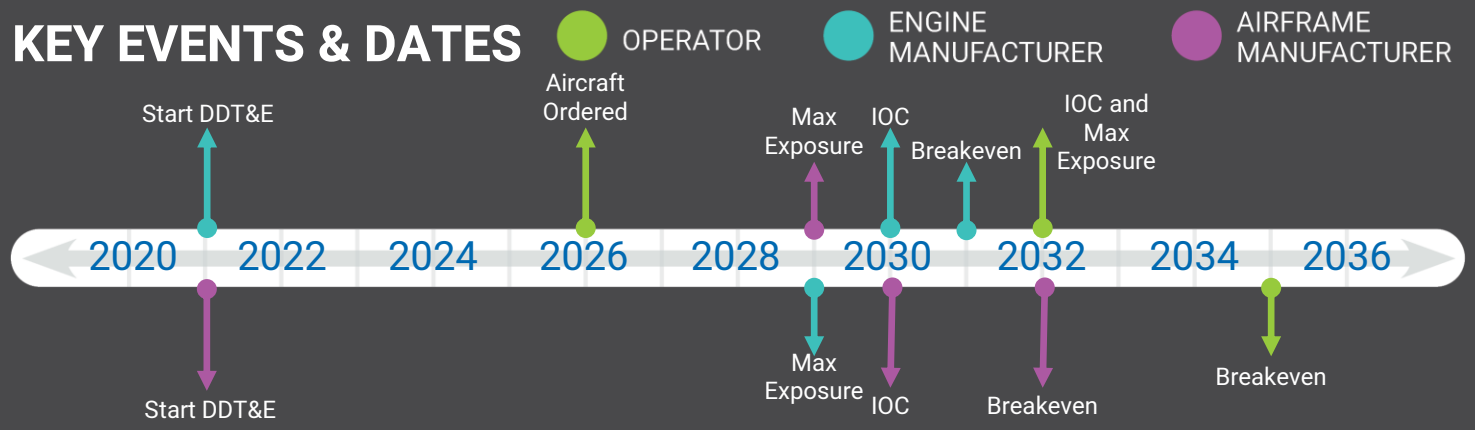

Business Results

OPERATOR

29%
ROIC (avg)

$1.6B
NPV

$3.6B
Max Exposure

ENGINE MANUFACTURER

23%
IRR

$757M
NPV

$1.5B
Max Exposure

AIRFRAME MANUFACTURER

23%
IRR

$2.6B
NPV

$4.9B
Max Exposure

BUSINESS CASE ANALYSIS

This aircraft is capturing 24 of 37 addressable routes that are within its design range which are exclusively Atlantic Ocean routes.

NASA SBIR Contract #80NSSC22C0008

Jet-A Matrix – Aircraft 2

ID: JTA.M2.P20.R4000.20230518

Mach 2
Cruise Speed

4,000 nmi
Max Range

20
Passenger Count

JetA
Fuel Type

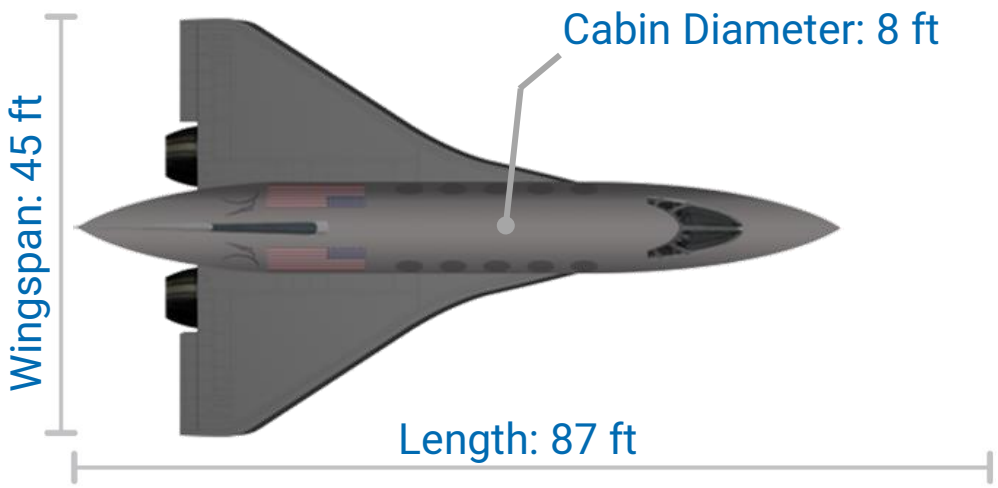

COST METRICS (FY21 USD)

DDT&E

$5.0B Airframe

$2.0B Engine

TFU

$64M Airframe

$6.4M Engine

ENVIRONMENTAL METRICS

90 EPNdB
Lateral Takeoff Noise

102 PNLdB
Sonic Boom

0.47 kg/km/pax
Emissions (CO_2e)

0.14 kg/km/pax
Fuel Consumption Rate

95,000 lbm
MTOW

40,200 lbm
MEW

4 x 8,900 lbf
Engine Thrust SLS

4.4 hours
Gate-to-Gate Time
at Max Range

56,300 ft
Cruise Altitude

6,600 ft
Bal. Field Length SL

AIRCRAFT NOTES

- Supersonic cruise condition L/D = 8
- Supersonic cruise condition Isp = 3000 s
- Vehicle propellant mass fraction (PMF) = 0.47
- Takeoff T/W = 0.375
- Effective Dose Rate (51° Lat.) = 9.0 μSv/hr

NASA SBIR Contract #80NSSC22C0008

Jet-A Matrix – Aircraft 2

SpaceWorks

NASA

ID: JTA.M2.P20.R4000.20230518

Key Inputs

Mach 2
Cruise Speed

4,000 nmi
Range

20
Passenger Count

JetA
Fuel Type

OPERATOR METRICS

$7,700-$8,700
Ticket Price

0.3M
Pax/Year

20
Routes Captured

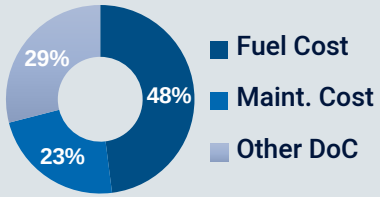

MANUFACTURER METRICS

$354M
Aircraft Price

$271M
Airframe Price

$21M x4
Engine Price

157
Aircraft Sold

KEY EVENTS & DATES

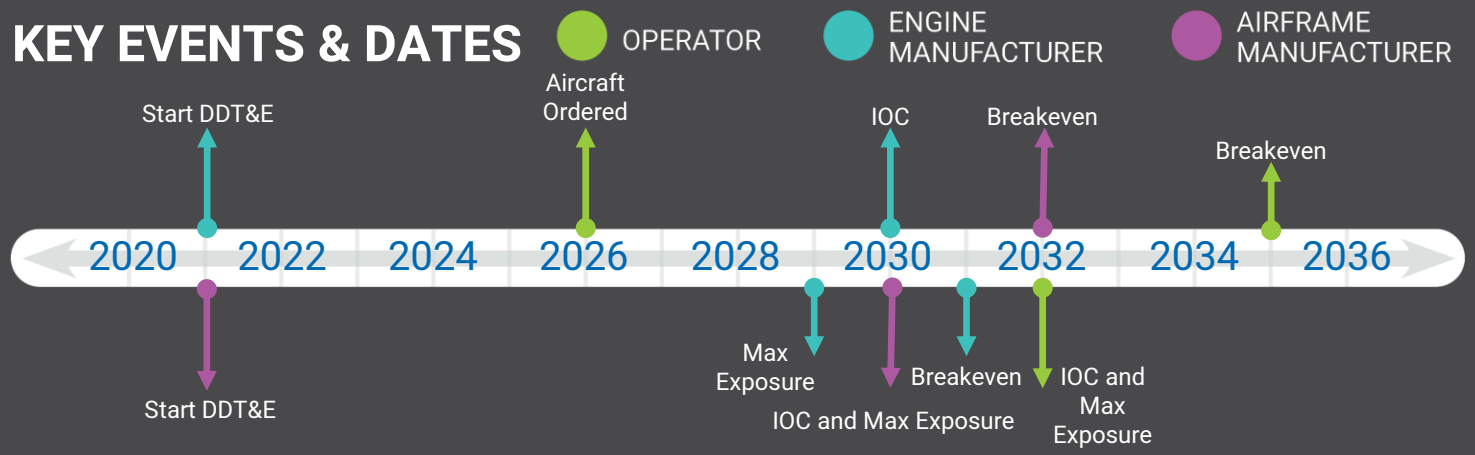

Business Results

OPERATOR

9%
ROIC (avg)

$996M
NPV

$3.4B
Max Exposure

ENGINE MANUFACTURER

22%
IRR

$728M
NPV

$1.9B
Max Exposure

AIRFRAME MANUFACTURER

22%
IRR

$2.4B
NPV

$5.9B
Max Exposure

BUSINESS CASE ANALYSIS

This aircraft is capturing 20 of 37 addressable routes that are within its design range which are exclusively Atlantic Ocean routes.

NASA SBIR Contract #80NSSC22C0008

Jet-A Matrix – Aircraft 3

ID: JTA.M3.P20.R4000.20230518

Mach 3
Cruise Speed

4,000 nmi
Max Range

20
Passenger Count

JetA
Fuel Type

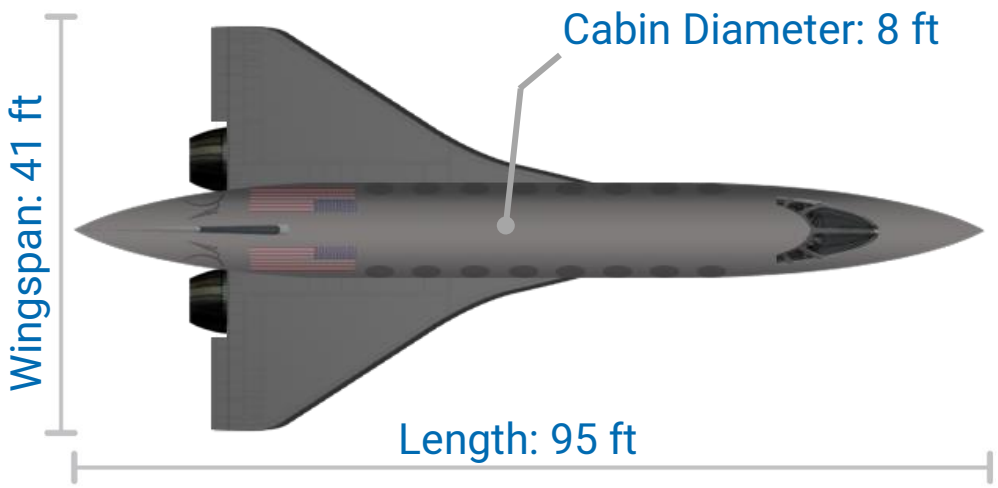

COST METRICS (FY21 USD)

DDT&E

$6.0B	$2.8B
Airframe	Engine

TFU

$80M	$12M
Airframe	Engine

ENVIRONMENTAL METRICS

91 EPNdB
Lateral Takeoff Noise

101 PNLdB
Sonic Boom

0.76 kg/km/pax
Emissions (CO_2e)

0.23 kg/km/pax
Fuel Consumption Rate

135,000 lbm
MTOW

51,600 lbm
MEW

4 x 12,700 lbf
Engine Thrust SLS

3.1 hours
Gate-to-Gate Time
at Max Range

73,300 ft
Cruise Altitude

7,800 ft
Bal. Field Length SL

AIRCRAFT NOTES

- Supersonic cruise condition L/D = 6.4
- Supersonic cruise condition Isp = 2000 s
- Vehicle propellant mass fraction (PMF) = 0.47
- Takeoff T/W = 0.375
- Effective Dose Rate (51° Lat.) = 9.1 μSv/hr

NASA SBIR Contract #80NSSC22C0008

Jet-A Matrix – Aircraft 3

SpaceWorks

NASA

ID: JTA.M3.P20.R4000.20230518

Key Inputs

Mach 3
Cruise Speed

4,000 nmi
Range

20
Passenger Count

JetA
Fuel Type

OPERATOR METRICS

$7,400-$8,300
Ticket Price

0.4M
Pax/Year

21
Routes Captured

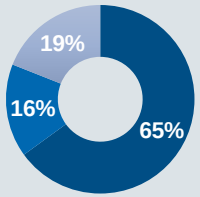

MANUFACTURER METRICS

$363M
Aircraft Price

$260M
Airframe Price

$26M x4
Engine Price

157
Aircraft Sold

KEY EVENTS & DATES

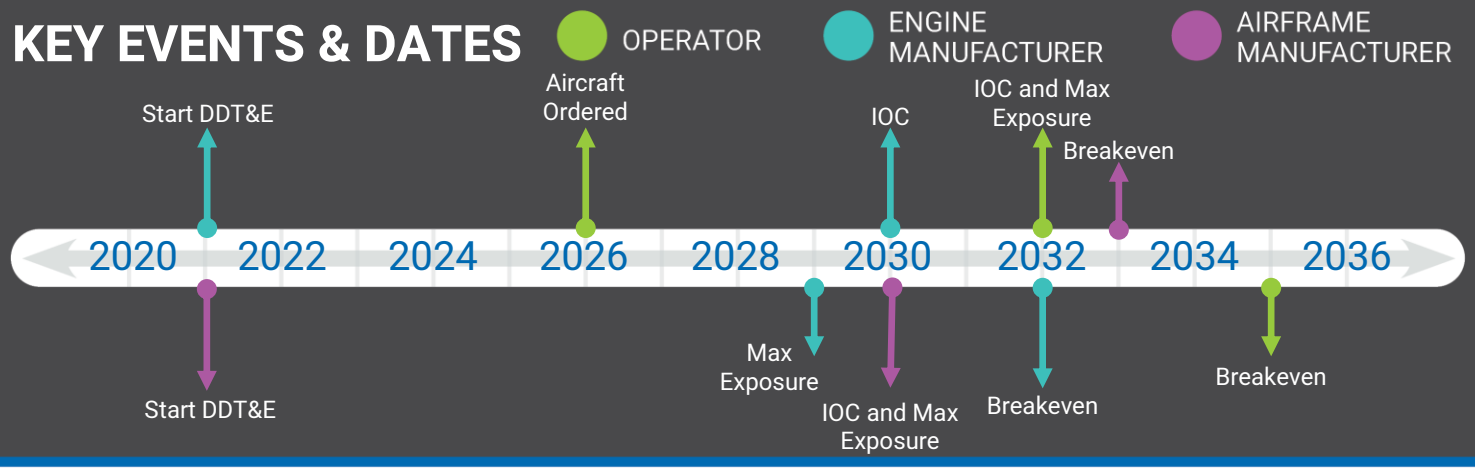

Business Results

OPERATOR

8%
ROIC (avg)

$1.2B
NPV

$3.5B
Max Exposure

ENGINE MANUFACTURER

18%
IRR

$502M
NPV

$2.7B
Max Exposure

AIRFRAME MANUFACTURER

18%
IRR

$1.4B
NPV

$7.5B
Max Exposure

BUSINESS CASE ANALYSIS

This aircraft is capturing 21 of 37 addressable routes that are within its design range which are exclusively Atlantic Ocean routes.

NASA SBIR Contract #80NSSC22C0008

Jet-A Matrix – Aircraft 4

ID: JTA.M4.P20.R4000.20230518

Mach 4
Cruise Speed

4,000 nmi
Max Range

20
Passenger Count

JetA
Fuel Type

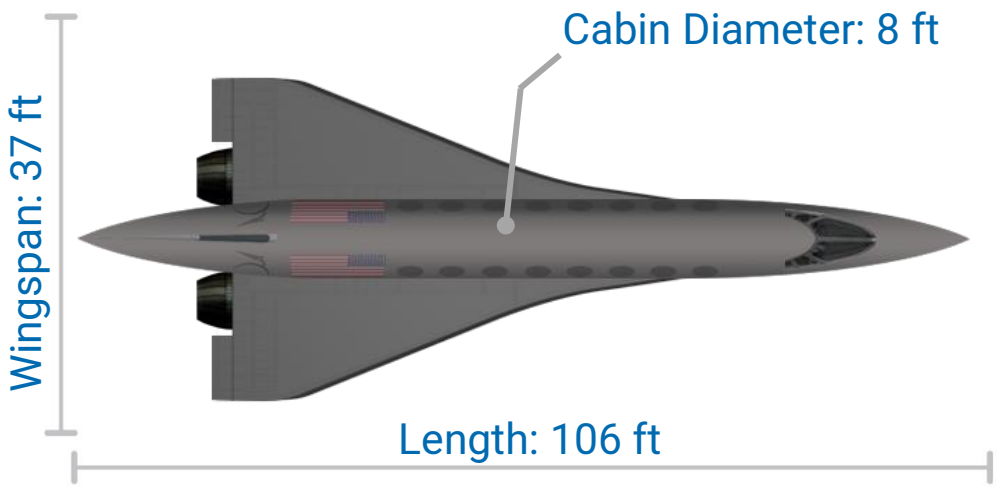

COST METRICS (FY21 USD)

DDT&E

$6.7B Airframe

$3.6B Engine

TFU

$93M Airframe

$19M Engine

ENVIRONMENTAL METRICS

91 EPNdB
Lateral Takeoff Noise

101 PNLdB
Sonic Boom

0.92 kg/km/pax
Emissions (CO_2e)

0.28 kg/km/pax
Fuel Consumption Rate

161,000 lbm
MTOW

60,900 lbm
MEW

4 x 15,100 lbf
Engine Thrust SLS

2.5 hours
Gate-to-Gate Time
at Max Range

85,500 ft
Cruise Altitude

9,100 ft
Bal. Field Length SL

AIRCRAFT NOTES

- Supersonic cruise condition L/D = 5.6
- Supersonic cruise condition Isp = 1599 s
- Vehicle propellant mass fraction (PMF) = 0.47
- Takeoff T/W = 0.375
- Effective Dose Rate (51° Lat.) = 8.5 μSv/hr

NASA SBIR Contract #80NSSC22C0008

Jet-A Matrix – Aircraft 4

ID: JTA.M4.P20.R4000.20230518

Key Inputs

Mach 4
Cruise Speed

4,000 nmi
Range

20
Passenger Count

JetA
Fuel Type

OPERATOR METRICS

$9,000-$10,100
Ticket Price

0.4M
Pax/Year

21
Routes Captured

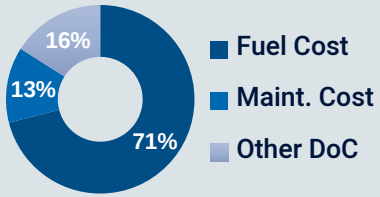

MANUFACTURER METRICS

$396M
Aircraft Price

$265M
Airframe Price

$33M x4
Engine Price

135
Aircraft Sold

KEY EVENTS & DATES

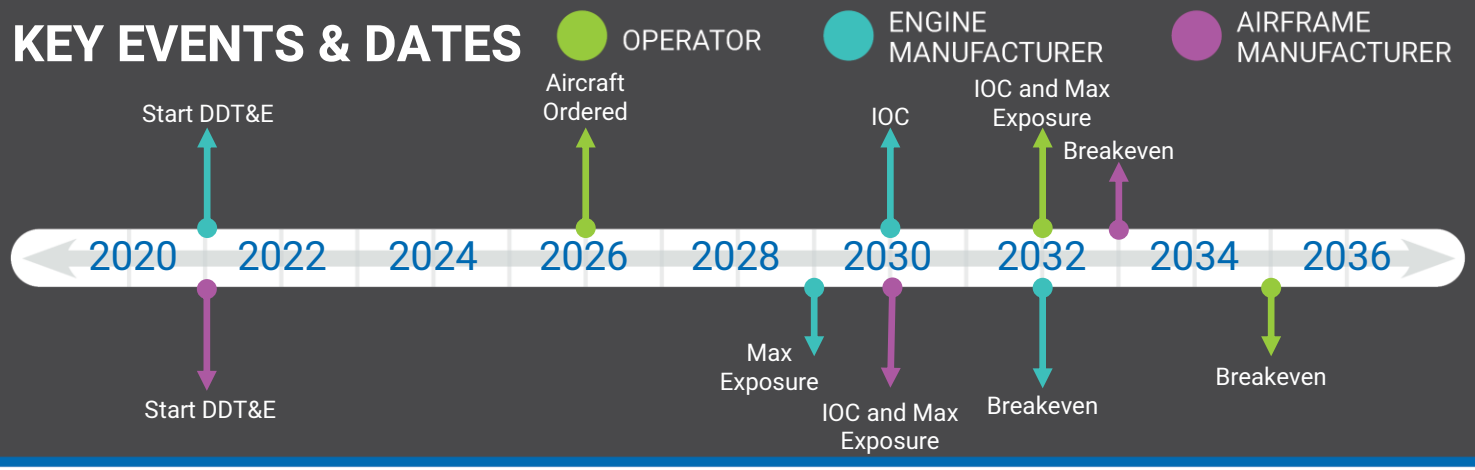

Business Results

OPERATOR

6%
ROIC (avg)

$1.1B
NPV

$3.3B
Max Exposure

ENGINE MANUFACTURER

15%
IRR

$131M
NPV

$3.5B
Max Exposure

AIRFRAME MANUFACTURER

15%
IRR

$324M
NPV

$8.9B
Max Exposure

BUSINESS CASE ANALYSIS

This aircraft is capturing 21 of 37 addressable routes that are within its design range which are exclusively Atlantic Ocean routes.

NASA SBIR Contract #80NSSC22C0008

Jet-A Matrix – Aircraft 5

ID: JTA.M5.P20.R4000.20230518

Mach 5
Cruise Speed

4,000 nmi
Max Range

20
Passenger Count

JetA
Fuel Type

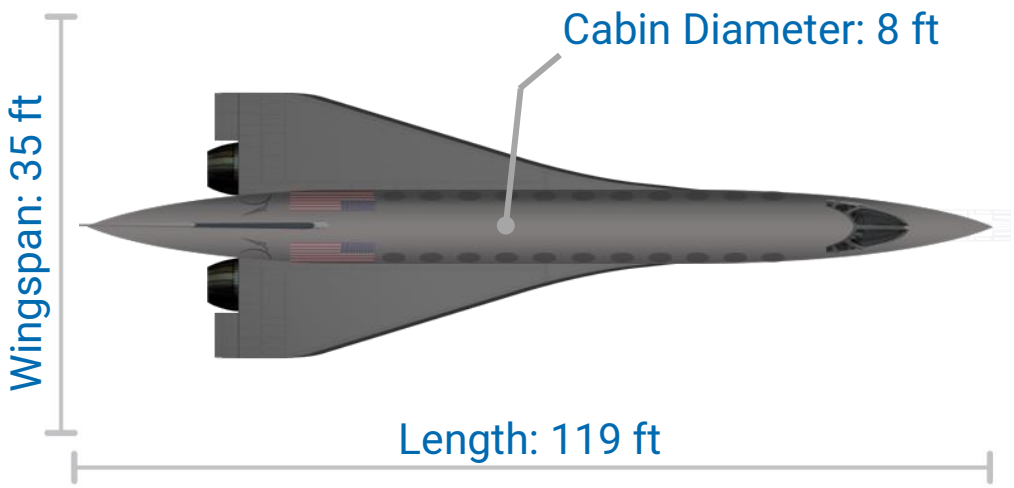

COST METRICS (FY21 USD)

DDT&E

$7.5B Airframe

$4.4B Engine

TFU

$106M Airframe

$28M Engine

ENVIRONMENTAL METRICS

92 EPNdB
Lateral Takeoff Noise

101 PNLdB
Sonic Boom

1.06 kg/km/pax
Emissions (CO2e)

0.33 kg/km/pax
Fuel Consumption Rate

186,000 lbm
MTOW

71,600 lbm
MEW

4 x 17,500 lbf
Engine Thrust SLS

2.1 hours
Gate-to-Gate Time
at Max Range

95,100 ft
Cruise Altitude

10,400 ft
Bal. Field Length SL

AIRCRAFT NOTES

- Supersonic cruise condition L/D = 5.1
- Supersonic cruise condition Isp = 1299 s
- Vehicle propellant mass fraction (PMF) = 0.47
- Takeoff T/W = 0.375
- Effective Dose Rate (51º Lat.) = 8.1 μSv/hr

NASA SBIR Contract #80NSSC22C0008

Jet-A Matrix – Aircraft 5

SpaceWorks

NASA

ID: JTA.M5.P20.R4000.20230518

Key Inputs

Mach 5
Cruise Speed

4,000 nmi
Range

20
Passenger Count

JetA
Fuel Type

OPERATOR METRICS

$16,800-$18,900
Ticket Price

0.1M
Pax/Year

7
Routes Captured

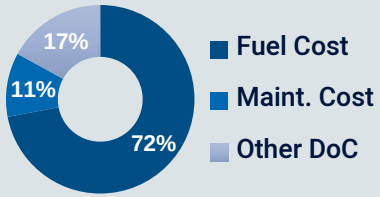

MANUFACTURER METRICS

$660M
Aircraft Price

$395M
Airframe Price

$66M x4
Engine Price

44
Aircraft Sold

KEY EVENTS & DATES

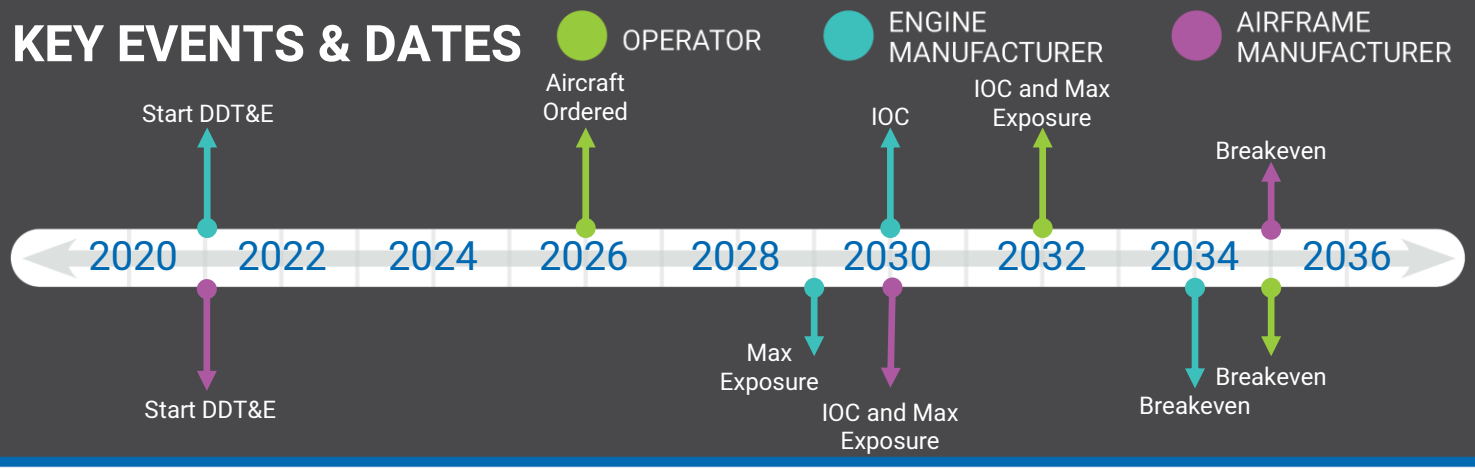

Business Results

OPERATOR

5%
ROIC (avg)

$400M
NPV

$1.3B
Max Exposure

ENGINE MANUFACTURER

13%
IRR

$-308M
NPV

$5.0B
Max Exposure

AIRFRAME MANUFACTURER

13%
IRR

$-650M
NPV

$11B
Max Exposure

BUSINESS CASE ANALYSIS

This aircraft is capturing 7 of 37 addressable routes that are within its design range which are exclusively Atlantic Ocean routes.

NASA SBIR Contract #80NSSC22C0008

Jet-A Matrix – Aircraft 6

ID: JTA.M1.5.P50.R4000.20230518

Mach 1.5
Cruise Speed

4,000 nmi
Max Range

50
Passenger Count

JetA
Fuel Type

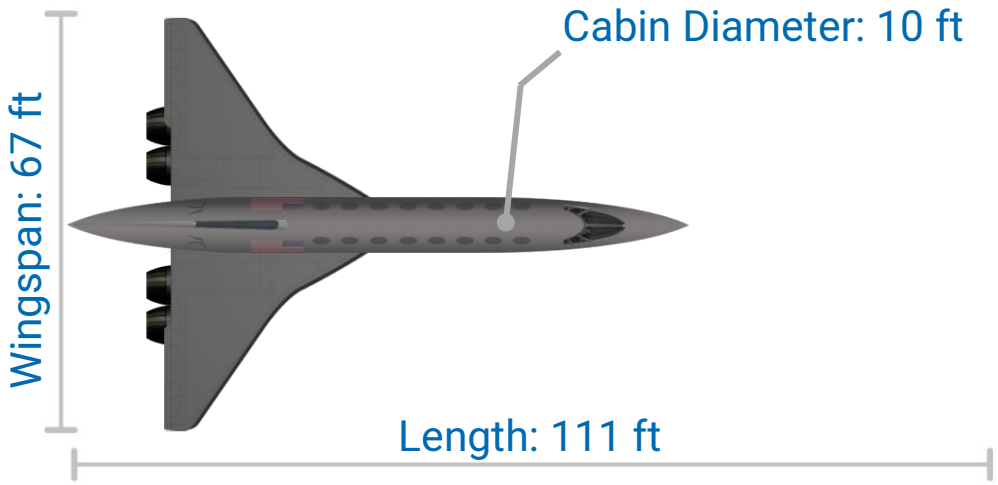

COST METRICS (FY21 USD)

DDT&E

$6.3B Airframe

$2.1B Engine

TFU

$85M Airframe

$7.9M Engine

ENVIRONMENTAL METRICS

91 EPNdB
Lateral Takeoff Noise

106 PNLdB
Sonic Boom

0.24 kg/km/pax
Emissions (CO_2e)

0.08 kg/km/pax
Fuel Consumption Rate

139,000 lbm
MTOW

62,000 lbm
MEW

4 x 13,000 lbf
Engine Thrust SLS

5.5 hours
Gate-to-Gate Time
at Max Range

44,400 ft
Cruise Altitude

6,000 ft
Bal. Field Length SL

AIRCRAFT NOTES

- Supersonic cruise condition L/D = 9.6
- Supersonic cruise condition Isp = 3991 s
- Vehicle propellant mass fraction (PMF) = 0.47
- Takeoff T/W = 0.375
- Effective Dose Rate (51º Lat.) = 6.4 μSv/hr

NASA SBIR Contract #80NSSC22C0008

Jet-A Matrix – Aircraft 6

SpaceWorks

NASA

ID: JTA.M1.5.P50.R4000.20230518

Key Inputs

Mach 1.5
Cruise Speed

4,000 nmi
Range

50
Passenger Count

JetA
Fuel Type

OPERATOR METRICS

$4,700-$5,300
Ticket Price

0.7M
Pax/Year

19
Routes Captured

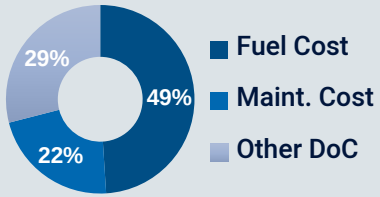

MANUFACTURER METRICS

$445M
Aircraft Price

$351M
Airframe Price

$23M x4
Engine Price

152
Aircraft Sold

KEY EVENTS & DATES

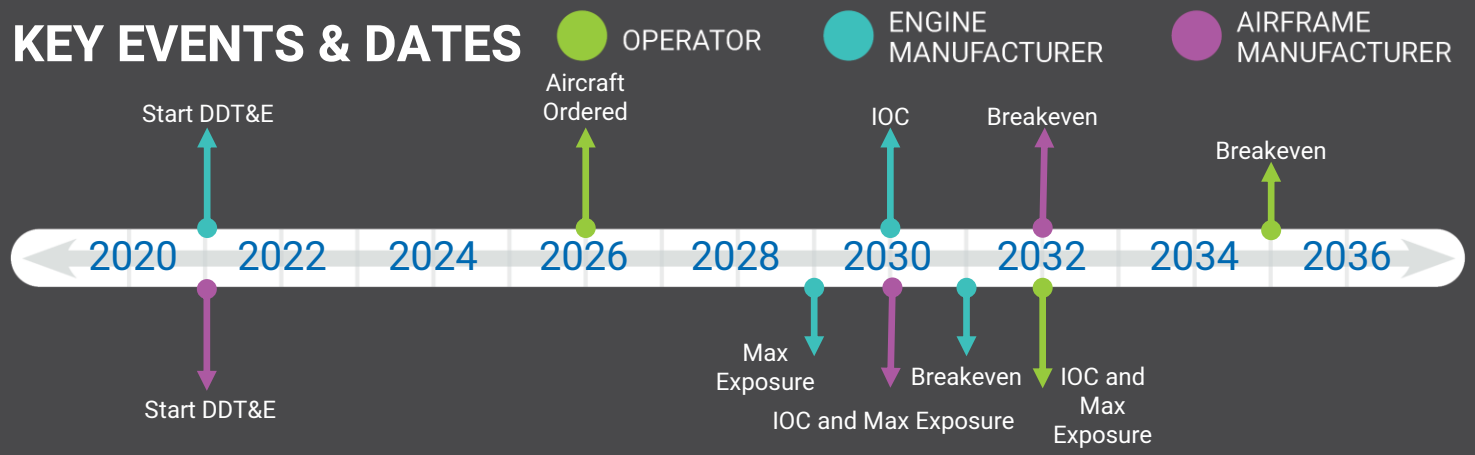

Business Results

OPERATOR

9%
ROIC (avg)

$1.2B
NPV

$4.0B
Max Exposure

ENGINE MANUFACTURER

21%
IRR

$680M
NPV

$2.0B
Max Exposure

AIRFRAME MANUFACTURER

21%
IRR

$2.5B
NPV

$7.1B
Max Exposure

BUSINESS CASE ANALYSIS

This aircraft is capturing 19 of 37 addressable routes that are within its design range which are exclusively Atlantic Ocean routes.

NASA SBIR Contract #80NSSC22C0008

Jet-A Matrix – Aircraft 7

ID: JTA.M2.P50.R4000.20230518

Mach 2
Cruise Speed

4,000 nmi
Max Range

50
Passenger Count

JetA
Fuel Type

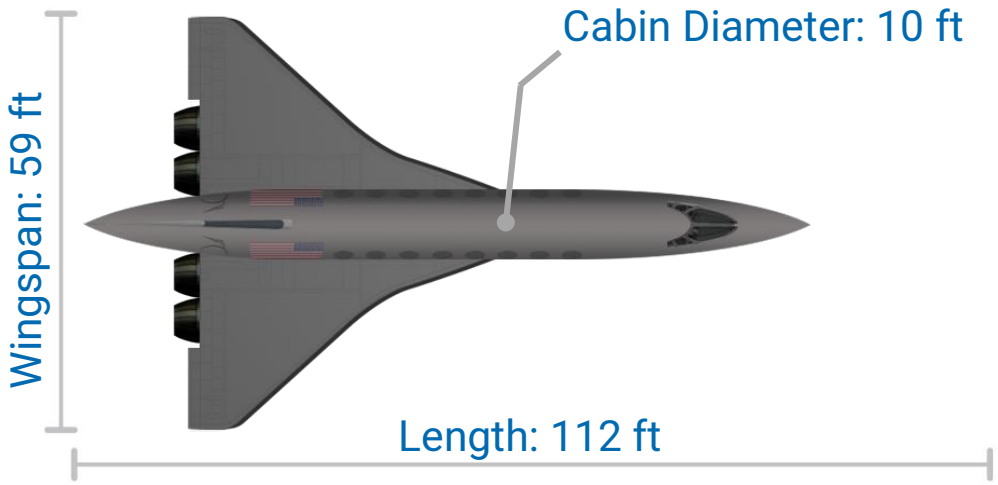

COST METRICS (FY21 USD)

DDT&E

$6.9B Airframe

$2.5B Engine

TFU

$95M Airframe

$11M Engine

ENVIRONMENTAL METRICS

91 EPNdB
Lateral Takeoff Noise

104 PNLdB
Sonic Boom

0.33 kg/km/pax
Emissions (CO_2e)

0.1 kg/km/pax
Fuel Consumption Rate

167,000 lbm
MTOW

69,000 lbm
MEW

4 x 15,700 lbf
Engine Thrust SLS

4.4 hours
Gate-to-Gate Time
at Max Range

56,300 ft
Cruise Altitude

6,600 ft
Bal. Field Length SL

AIRCRAFT NOTES

- Supersonic cruise condition L/D = 8
- Supersonic cruise condition Isp = 3000 s
- Vehicle propellant mass fraction (PMF) = 0.47
- Takeoff T/W = 0.375
- Effective Dose Rate (51° Lat.) = 9.0 μSv/hr

NASA SBIR Contract #80NSSC22C0008

Jet-A Matrix – Aircraft 7

SpaceWorks

NASA

ID: JTA.M2.P50.R4000.20230518

Key Inputs

Mach 2
Cruise Speed

4,000 nmi
Range

50
Passenger Count

JetA
Fuel Type

OPERATOR METRICS

$5,700-$6,400
Ticket Price

0.5M
Pax/Year

16
Routes Captured

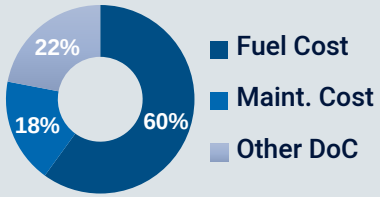

MANUFACTURER METRICS

$667M
Aircraft Price

$513M
Airframe Price

$38M x4
Engine Price

97
Aircraft Sold

KEY EVENTS & DATES

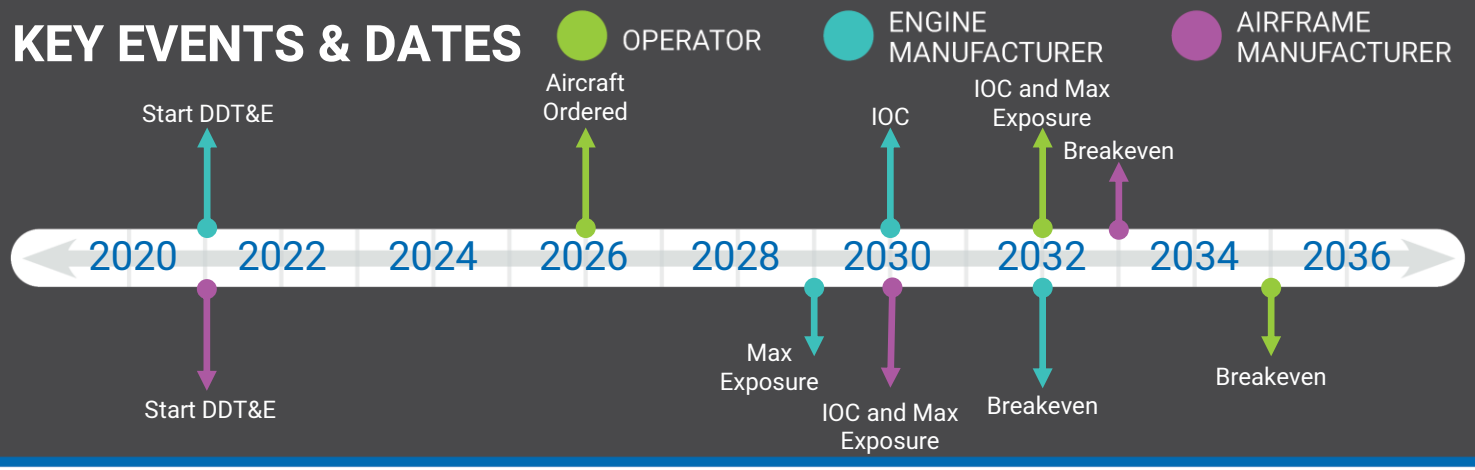

Business Results

OPERATOR

10%
ROIC (avg)

$1.2B
NPV

$3.6B
Max Exposure

ENGINE MANUFACTURER

19%
IRR

$544M
NPV

$2.5B
Max Exposure

AIRFRAME MANUFACTURER

19%
IRR

$1.8B
NPV

$8.2B
Max Exposure

BUSINESS CASE ANALYSIS

This aircraft is capturing 16 of 37 addressable routes that are within its design range which are exclusively Atlantic Ocean routes.

NASA SBIR Contract #80NSSC22C0008

Jet-A Matrix – Aircraft 8

ID: JTA.M3.P50.R4000.20230518

Mach 3
Cruise Speed

4,000 nmi
Max Range

50
Passenger Count

JetA
Fuel Type

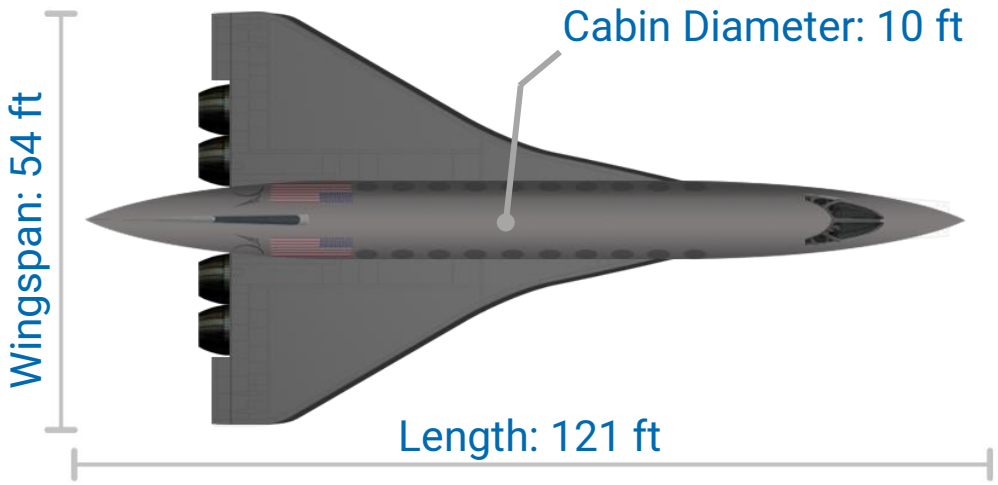

COST METRICS (FY21 USD)

DDT&E

$8.4B Airframe

$3.5B Engine

TFU

$120M Airframe

$21M Engine

ENVIRONMENTAL METRICS

93 EPNdB
Lateral Takeoff Noise

103 PNLdB
Sonic Boom

0.53 kg/km/pax
Emissions (CO_2e)

0.16 kg/km/pax
Fuel Consumption Rate

236,000 lbm
MTOW

87,800 lbm
MEW

4 x 22,100 lbf
Engine Thrust SLS

3.1 hours
Gate-to-Gate Time
at Max Range

73,300 ft
Cruise Altitude

7,800 ft
Bal. Field Length SL

AIRCRAFT NOTES

- Supersonic cruise condition L/D = 6.4
- Supersonic cruise condition Isp = 2000 s
- Vehicle propellant mass fraction (PMF) = 0.47
- Takeoff T/W = 0.375
- Effective Dose Rate (51° Lat.) = 9.1 μSv/hr

NASA SBIR Contract #80NSSC22C0008

Jet-A Matrix – Aircraft 8

SpaceWorks

NASA

ID: JTA.M3.P50.R4000.20230518

Key Inputs

Mach 3
Cruise Speed

4,000 nmi
Range

50
Passenger Count

JetA
Fuel Type

OPERATOR METRICS

$8,800-$9,900
Ticket Price

0.2M
Pax/Year

9
Routes Captured

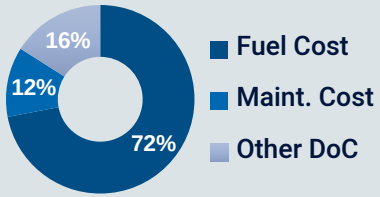

MANUFACTURER METRICS

$830M
Aircraft Price

$585M
Airframe Price

$61M x4
Engine Price

54
Aircraft Sold

KEY EVENTS & DATES

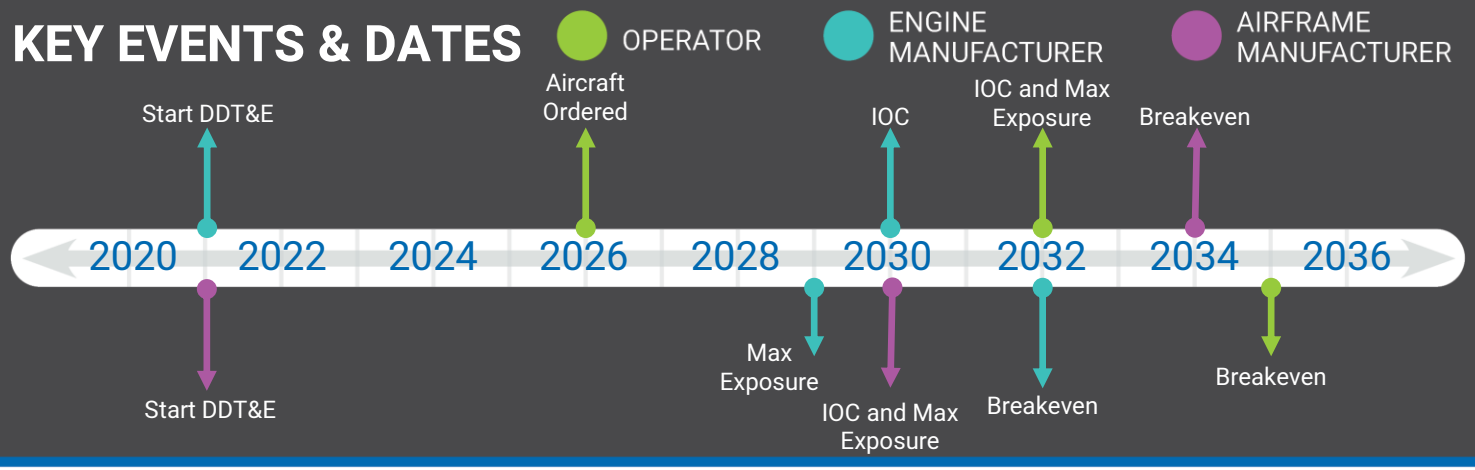

Business Results

OPERATOR

7%
ROIC (avg)

$718M
NPV

$2.3B
Max Exposure

ENGINE MANUFACTURER

17%
IRR

$430M
NPV

$3.9B
Max Exposure

AIRFRAME MANUFACTURER

17%
IRR

$1.2B
NPV

$11B
Max Exposure

BUSINESS CASE ANALYSIS

This aircraft is capturing 9 of 37 addressable routes that are within its design range which are exclusively Atlantic Ocean routes.

NASA SBIR Contract #80NSSC22C0008

Jet-A Matrix – Aircraft 9

ID: JTA.M4.P50.R4000.20230518

Mach 4
Cruise Speed

4,000 nmi
Max Range

50
Passenger Count

JetA
Fuel Type

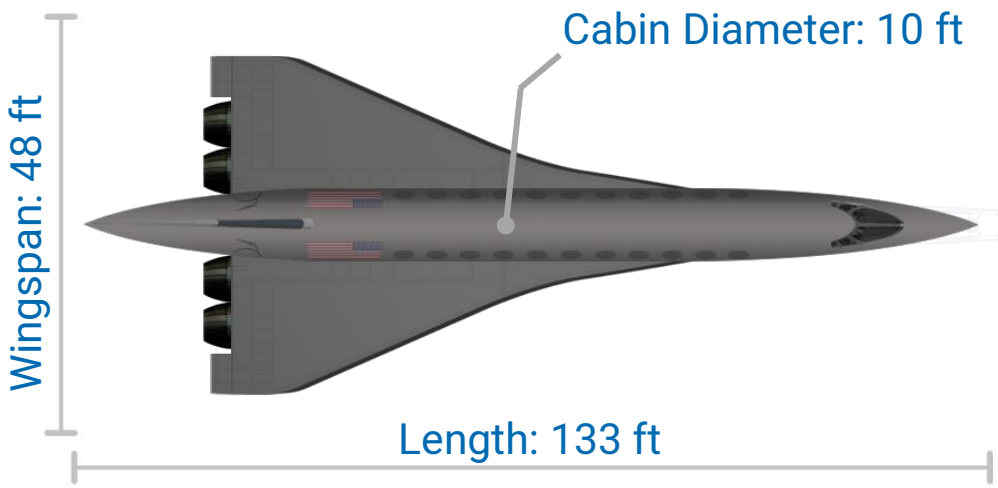

COST METRICS (FY21 USD)

DDT&E

$9.3B Airframe

$4.5B Engine

TFU

$137M Airframe

$33M Engine

ENVIRONMENTAL METRICS

93 EPNdB
Lateral Takeoff Noise

103 PNLdB
Sonic Boom

0.63 kg/km/pax
Emissions (CO_2e)

0.2 kg/km/pax
Fuel Consumption Rate

276,000 lbm
MTOW

101,900 lbm
MEW

4 x 25,900 lbf
Engine Thrust SLS

2.5 hours
Gate-to-Gate Time
at Max Range

85,500 ft
Cruise Altitude

9,100 ft
Bal. Field Length SL

AIRCRAFT NOTES

- Supersonic cruise condition L/D = 5.6
- Supersonic cruise condition Isp = 1599 s
- Vehicle propellant mass fraction (PMF) = 0.47
- Takeoff T/W = 0.375
- Effective Dose Rate (51° Lat.) = 8.5 μSv/hr

NASA SBIR Contract #80NSSC22C0008

Jet-A Matrix – Aircraft 9

SpaceWorks® NASA

ID: JTA.M4.P50.R4000.20230518

Key Inputs

Mach 4
Cruise Speed

4,000 nmi
Range

50
Passenger Count

JetA
Fuel Type

OPERATOR METRICS

$9,400-$10,500
Ticket Price

0.2M
Pax/Year

9
Routes Captured

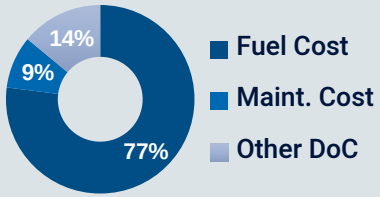

MANUFACTURER METRICS

$850M
Aircraft Price

$559M
Airframe Price

$73M x4
Engine Price

54
Aircraft Sold

KEY EVENTS & DATES

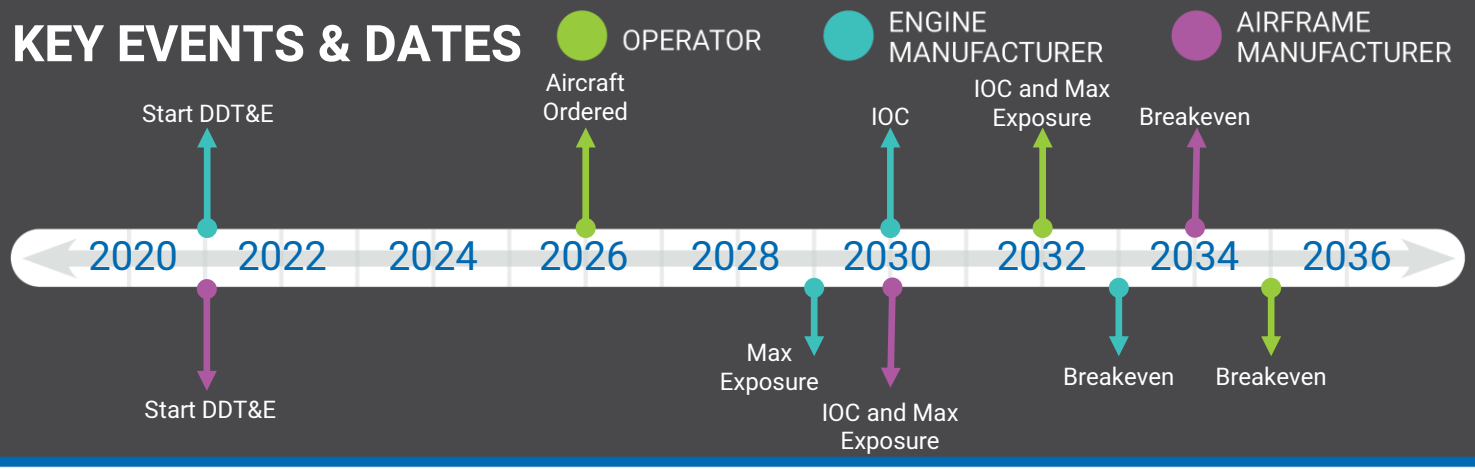

Business Results

OPERATOR

6%
ROIC (avg)

$744M
NPV

$2.4B
Max Exposure

ENGINE MANUFACTURER

15%
IRR

$190M
NPV

$4.9B
Max Exposure

AIRFRAME MANUFACTURER

15%
IRR

$482M
NPV

$12B
Max Exposure

BUSINESS CASE ANALYSIS

This aircraft is capturing 9 of 37 addressable routes that are within its design range which are exclusively Atlantic Ocean routes.

NASA SBIR Contract #80NSSC22C0008

Jet-A Matrix – Aircraft 10

ID: JTA.M5.P50.R4000.20230518

Mach 5
Cruise Speed

4,000 nmi
Max Range

50
Passenger Count

JetA
Fuel Type

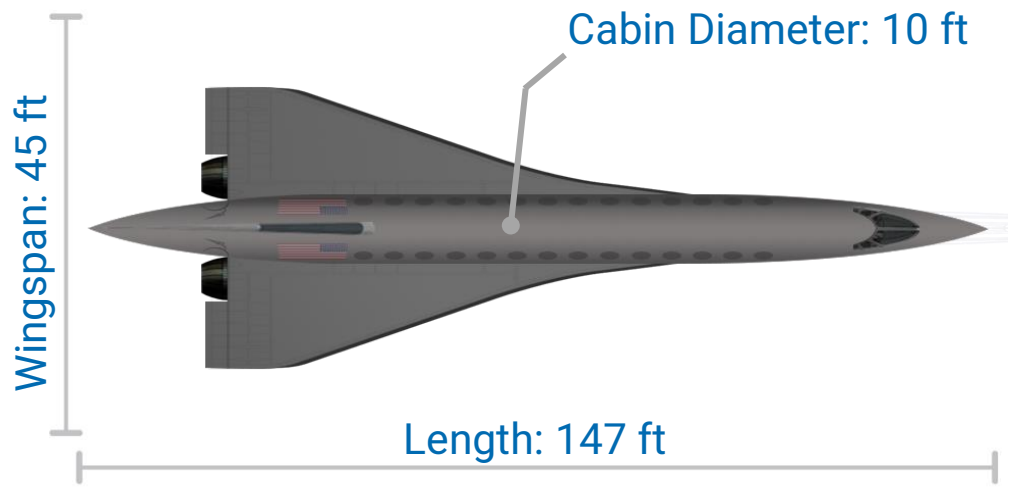

COST METRICS (FY21 USD)

DDT&E

$10B Airframe

$5.5B Engine

TFU

$154M Airframe

$46M Engine

ENVIRONMENTAL METRICS

94 EPNdB
Lateral Takeoff Noise

102 PNLdB
Sonic Boom

0.71 kg/km/pax
Emissions (CO_2e)

0.22 kg/km/pax
Fuel Consumption Rate

313,000 lbm
MTOW

117,400 lbm
MEW

4 x 29,300 lbf
Engine Thrust SLS

2.1 hours
Gate-to-Gate Time
at Max Range

95,100 ft
Cruise Altitude

10,400 ft
Bal. Field Length SL

AIRCRAFT NOTES

- Supersonic cruise condition L/D = 5.1
- Supersonic cruise condition Isp = 1299 s
- Vehicle propellant mass fraction (PMF) = 0.47
- Takeoff T/W = 0.375
- Effective Dose Rate (51° Lat.) = 8.1 μSv/hr

NASA SBIR Contract #80NSSC22C0008

Jet-A Matrix – Aircraft 10

SpaceWorks

NASA

ID: JTA.M5.P50.R4000.20230518

Key Inputs

Mach 5
Cruise Speed

4,000 nmi
Range

50
Passenger Count

JetA
Fuel Type

OPERATOR METRICS

$10,200-$11,500
Ticket Price

0.2M
Pax/Year

9
Routes Captured

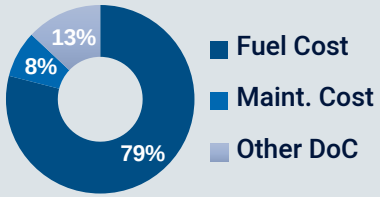

MANUFACTURER METRICS

$879M
Aircraft Price

$537M
Airframe Price

$86M x4
Engine Price

54
Aircraft Sold

KEY EVENTS & DATES

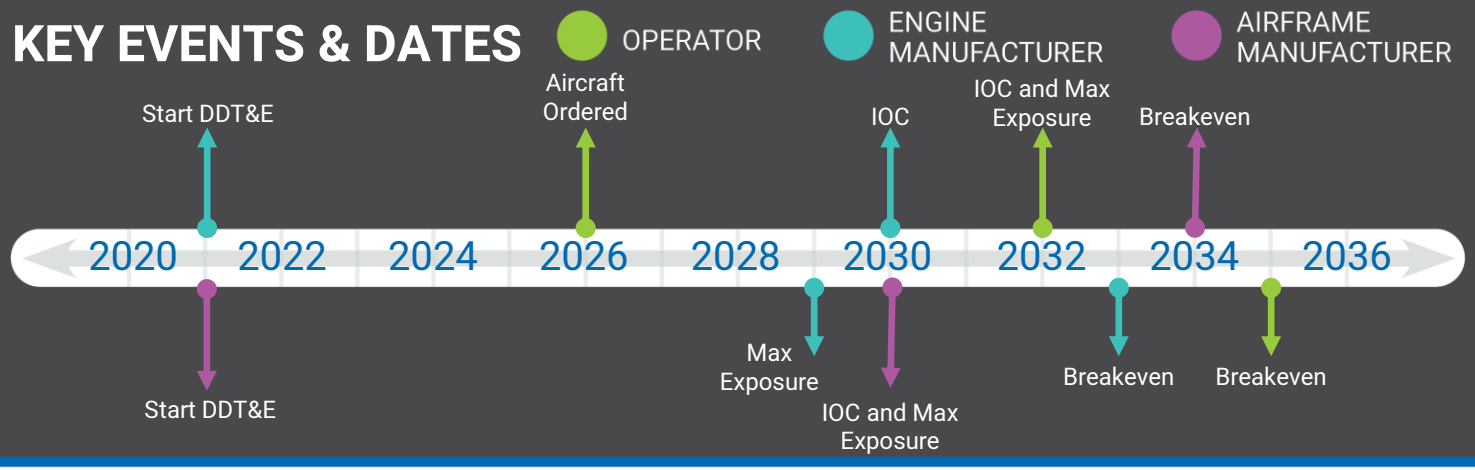

Business Results

OPERATOR

6%
ROIC (avg)

$771M
NPV

$2.5B
Max Exposure

ENGINE MANUFACTURER

14%
IRR

$-81.7M
NPV

$6.0B
Max Exposure

AIRFRAME MANUFACTURER

14%
IRR

$-188M
NPV

$14B
Max Exposure

BUSINESS CASE ANALYSIS

This aircraft is capturing 9 of 37 addressable routes that are within its design range which are exclusively Atlantic Ocean routes.

NASA SBIR Contract #80NSSC22C0008

Jet-A Matrix – Aircraft 11

ID: JTA.M1.5.P20.R6510.20230518

Mach 1.5
Cruise Speed

6,510 nmi
Max Range

20
Passenger Count

JetA
Fuel Type

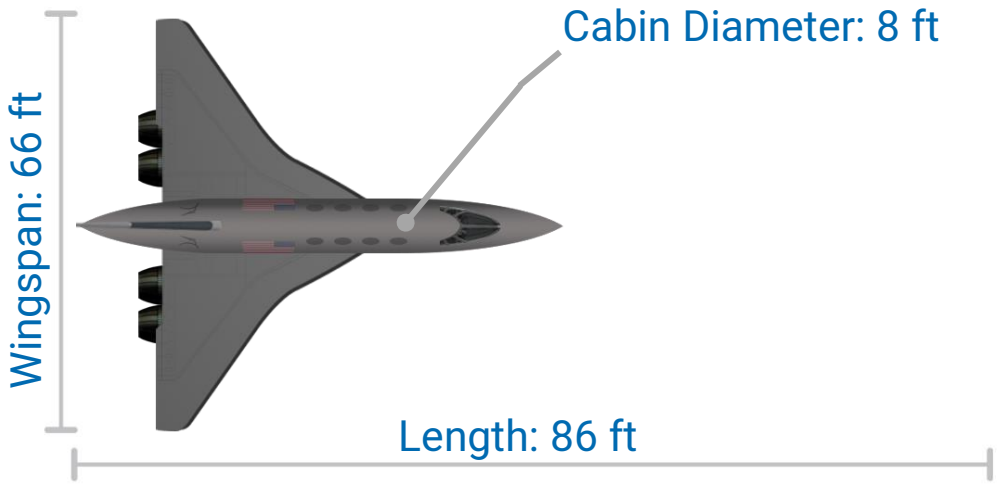

COST METRICS (FY21 USD)

DDT&E

$5.9B Airframe

$2.1B Engine

TFU

$77M Airframe

$8.0M Engine

ENVIRONMENTAL METRICS

91 EPNdB
Lateral Takeoff Noise

105 PNLdB
Sonic Boom

0.49 kg/km/pax
Emissions (CO_2e)

0.15 kg/km/pax
Fuel Consumption Rate

140,000 lbm
MTOW

51,200 lbm
MEW

4 x 13,100 lbf
Engine Thrust SLS

8.4 hours
Gate-to-Gate Time
at Max Range

44,400 ft
Cruise Altitude

6,000 ft
Bal. Field Length SL

AIRCRAFT NOTES

- Supersonic cruise condition L/D = 9.6
- Supersonic cruise condition Isp = 3991 s
- Vehicle propellant mass fraction (PMF) = 0.47
- Takeoff T/W = 0.375
- Effective Dose Rate (51º Lat.) = 6.4 μSv/hr

NASA SBIR Contract #80NSSC22C0008

Jet-A Matrix – Aircraft 11

SpaceWorks

NASA

ID: JTA.M1.5.P20.R6510.20230518

Key Inputs

Mach 1.5
Cruise Speed

6,510 nmi
Range

20
Passenger Count

JetA
Fuel Type

OPERATOR METRICS

$8,500-$11,300
Ticket Price

0.6M
Pax/Year

46
Routes Captured

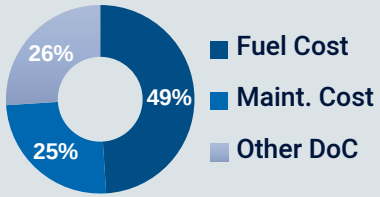

MANUFACTURER METRICS

$235M
Aircraft Price

$185M
Airframe Price

$12M x4
Engine Price

460
Aircraft Sold

KEY EVENTS & DATES

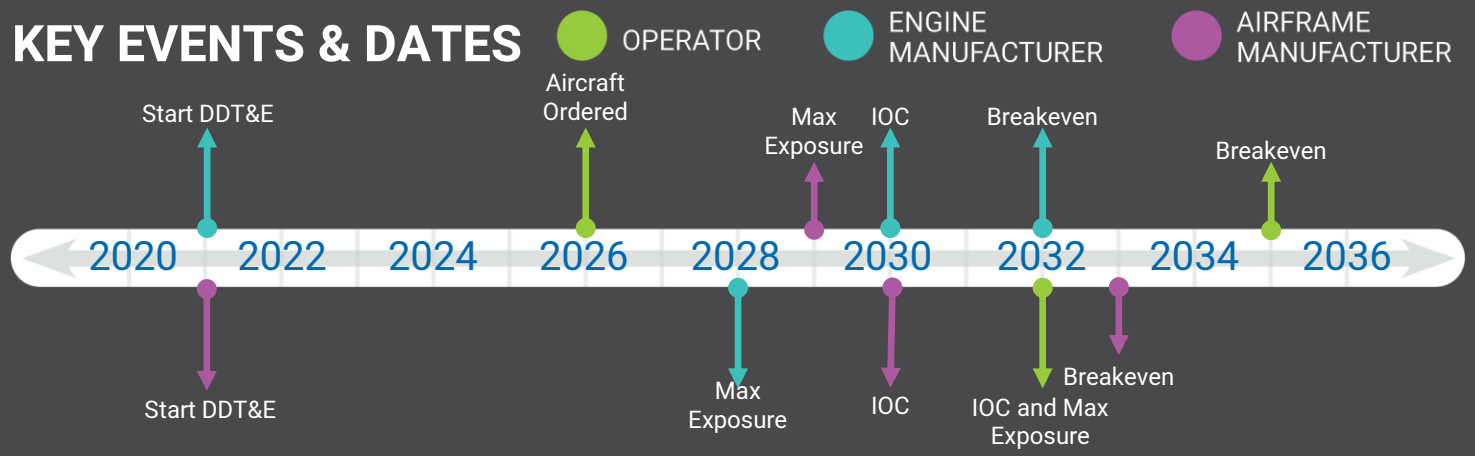

Business Results

OPERATOR

9%
ROIC (avg)

$2.3B
NPV

$5.3B
Max Exposure

ENGINE MANUFACTURER

21%
IRR

$683M
NPV

$1.7B
Max Exposure

AIRFRAME MANUFACTURER

21%
IRR

$2.6B
NPV

$6.1B
Max Exposure

BUSINESS CASE ANALYSIS

This aircraft is capturing 46 of 84 addressable routes that are within its design range which are a mix of Atlantic & Pacific Ocean routes.

NASA SBIR Contract #80NSSC22C0008

Jet-A Matrix – Aircraft 12

ID: JTA.M2.P20.R6100.20230518

Mach 2
Cruise Speed

6,100 nmi
Max Range

20
Passenger Count

JetA
Fuel Type

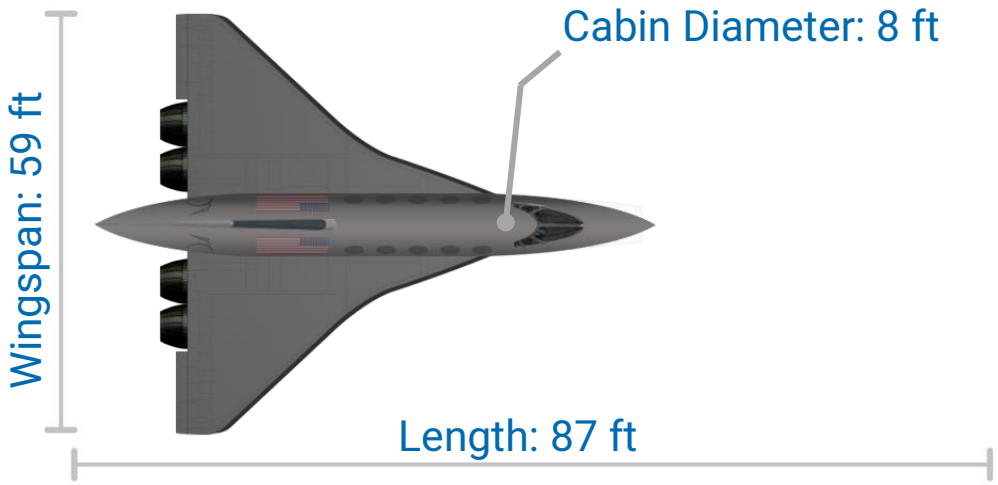

COST METRICS (FY21 USD)

DDT&E

$6.7B Airframe

$2.6B Engine

TFU

$91M Airframe

$12M Engine

ENVIRONMENTAL METRICS

92 EPNdB
Lateral Takeoff Noise

104 PNLdB
Sonic Boom

0.72 kg/km/pax
Emissions (CO2e)

0.22 kg/km/pax
Fuel Consumption Rate

179,000 lbm
MTOW

60,300 lbm
MEW

4 x 16,800 lbf
Engine Thrust SLS

6.2 hours
Gate-to-Gate Time
at Max Range

56,300 ft
Cruise Altitude

6,600 ft
Bal. Field Length SL

AIRCRAFT NOTES

- Supersonic cruise condition L/D = 8
- Supersonic cruise condition Isp = 3000 s
- Vehicle propellant mass fraction (PMF) = 0.47
- Takeoff T/W = 0.375
- Effective Dose Rate (51º Lat.) = 9.0 μSv/hr

NASA SBIR Contract #80NSSC22C0008

Jet-A Matrix – Aircraft 12

SpaceWorks

NASA

ID: JTA.M2.P20.R6100.20230518

Key Inputs

Mach 2
Cruise Speed

6,100 nmi
Range

20
Passenger Count

JetA
Fuel Type

OPERATOR METRICS

$11,300-$14,700
Ticket Price

0.3M
Pax/Year

27
Routes Captured

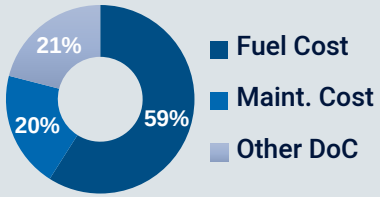

MANUFACTURER METRICS

$392M
Aircraft Price

$294M
Airframe Price

$24M x4
Engine Price

162
Aircraft Sold

KEY EVENTS & DATES

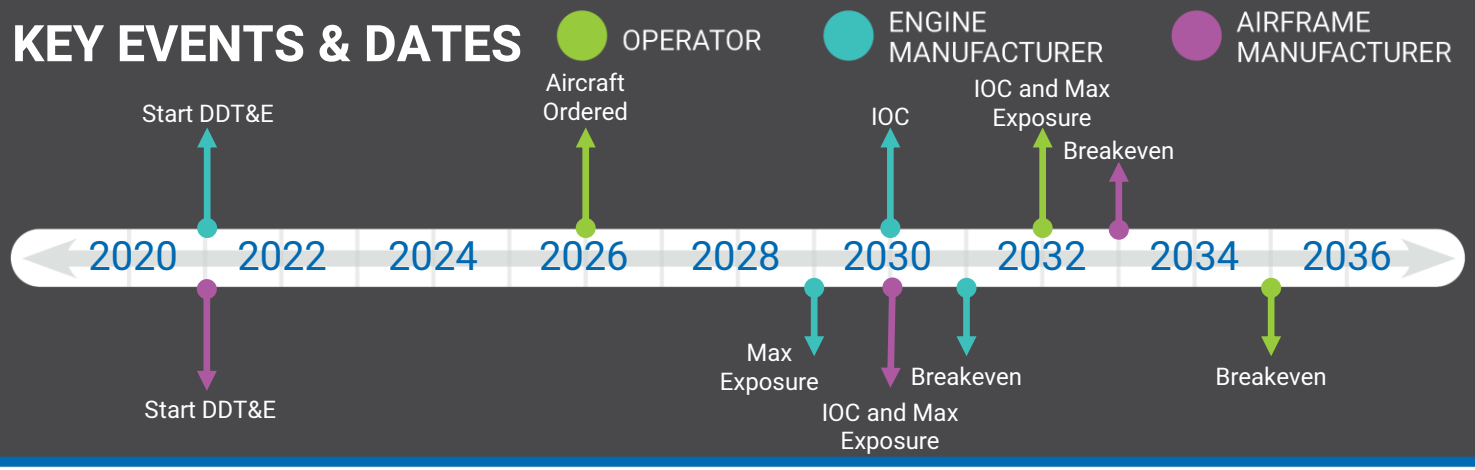

Business Results

OPERATOR

8%
ROIC (avg)

$1.4B
NPV

$3.9B
Max Exposure

ENGINE MANUFACTURER

19%
IRR

$533M
NPV

$2.5B
Max Exposure

AIRFRAME MANUFACTURER

19%
IRR

$1.7B
NPV

$7.9B
Max Exposure

BUSINESS CASE ANALYSIS

This aircraft is capturing 27 of 80 addressable routes that are within its design range which are a mix of Atlantic & Pacific Ocean routes.

NASA SBIR Contract #80NSSC22C0008

Jet-A Matrix – Aircraft 13

ID: JTA.M3.P20.R5700.20230518

Mach 3
Cruise Speed

5,700 nmi
Max Range

20
Passenger Count

JetA
Fuel Type

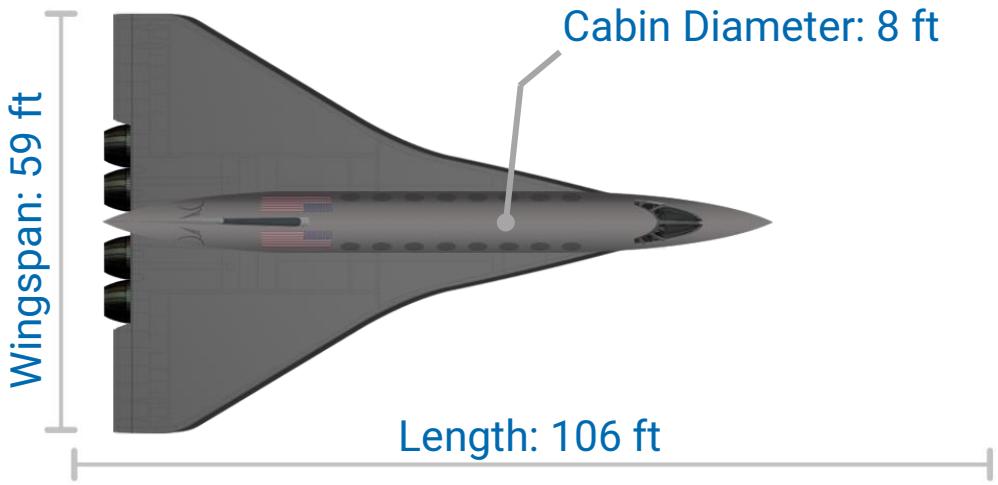

COST METRICS (FY21 USD)

DDT&E

$9.5B Airframe

$4.0B Engine

TFU

$139M Airframe

$29M Engine

ENVIRONMENTAL METRICS

94 EPNdB
Lateral Takeoff Noise

104 PNLdB
Sonic Boom

1.48 kg/km/pax
Emissions (CO2e)

0.46 kg/km/pax
Fuel Consumption Rate

317,000 lbm
MTOW

96,600 lbm
MEW

4 x 29,800 lbf
Engine Thrust SLS

4.1 hours
Gate-to-Gate Time
at Max Range

73,300 ft
Cruise Altitude

7,800 ft
Bal. Field Length SL

AIRCRAFT NOTES

- Supersonic cruise condition L/D = 6.4
- Supersonic cruise condition Isp = 2000 s
- Vehicle propellant mass fraction (PMF) = 0.47
- Takeoff T/W = 0.375
- Effective Dose Rate (51º Lat.) = 9.1 μSv/hr

NASA SBIR Contract #80NSSC22C0008

Jet-A Matrix – Aircraft 13

SpaceWorks

NASA

ID: JTA.M3.P20.R5700.20230518

Key Inputs

Mach 3
Cruise Speed

5,700 nmi
Range

20
Passenger Count

JetA
Fuel Type

OPERATOR METRICS

$14,400-$18,400
Ticket Price

0.2M
Pax/Year

21
Routes Captured

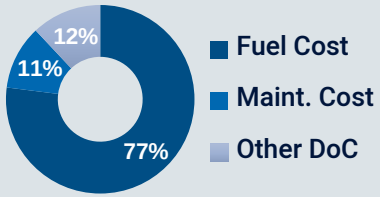

MANUFACTURER METRICS

$415M
Aircraft Price

$277M
Airframe Price

$34M x4
Engine Price

101
Aircraft Sold

KEY EVENTS & DATES

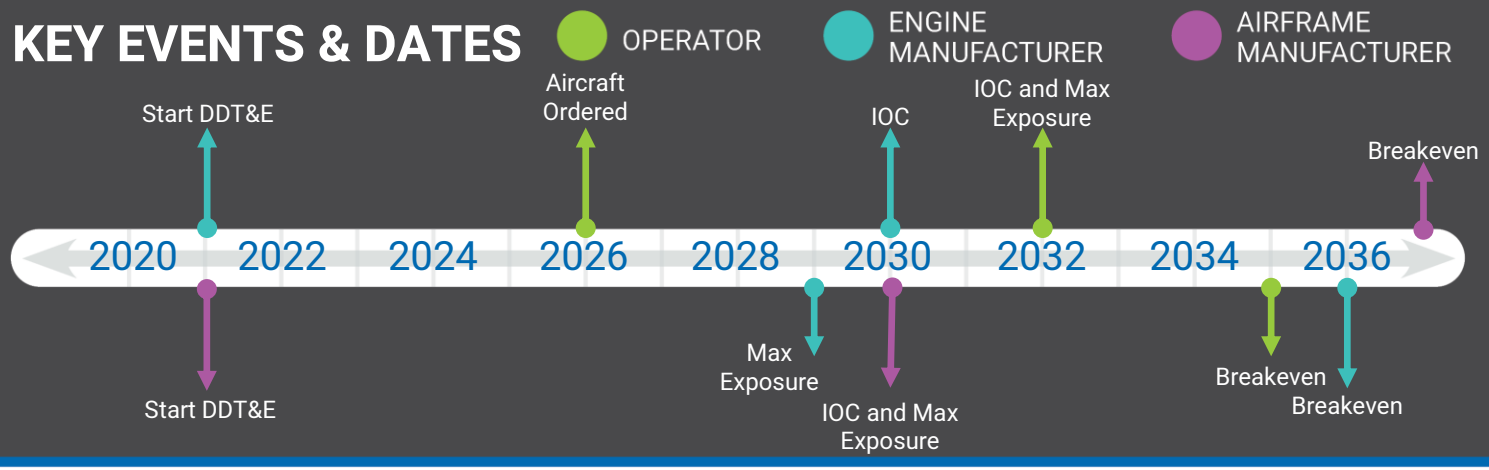

Business Results

OPERATOR

4%
ROIC (avg)

$777M
NPV

$2.6B
Max Exposure

ENGINE MANUFACTURER

9%
IRR

$-801M
NPV

$4.3B
Max Exposure

AIRFRAME MANUFACTURER

9%
IRR

$-2.2B
NPV

$12B
Max Exposure

BUSINESS CASE ANALYSIS

This aircraft is capturing 21 of 78 addressable routes that are within its design range which are a mix of Atlantic & Pacific Ocean routes.

NASA SBIR Contract #80NSSC22C0008

Jet-A Matrix – Aircraft 14

ID: JTA.M4.P20.R5400.20230518

Mach 4
Cruise Speed

5,400 nmi
Max Range

20
Passenger Count

JetA
Fuel Type

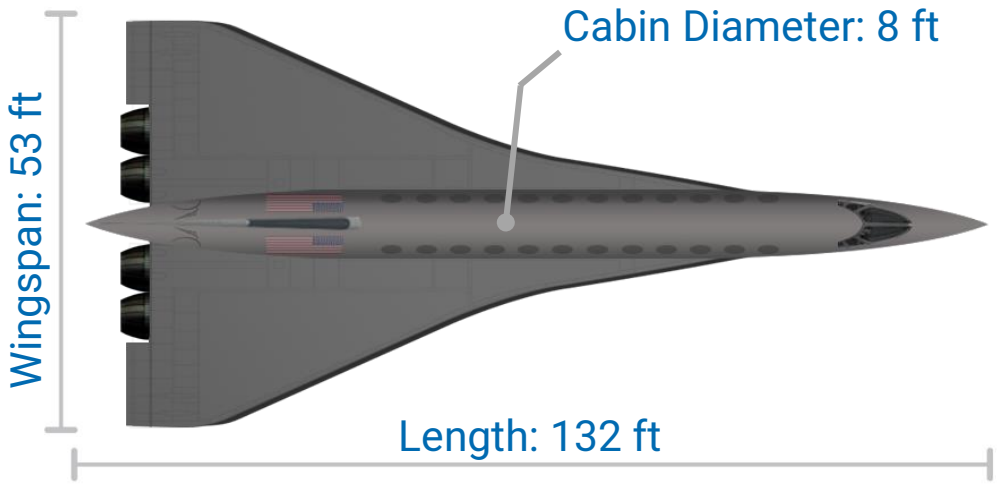

382,000 lbm MTOW	**118,700 lbm** MEW	**4 x 35,800 lbf** Engine Thrust SLS
3.1 hours Gate-to-Gate Time at Max Range	**85,500 ft** Cruise Altitude	**9,100 ft** Bal. Field Length SL

COST METRICS (FY21 USD)

DDT&E		TFU	
$11B Airframe	**$5.1B** Engine	**$164M** Airframe	**$45M** Engine

ENVIRONMENTAL METRICS

95 EPNdB Lateral Takeoff Noise	**1.87 kg/km/pax** Emissions (CO_2e)
103 PNLdB Sonic Boom	**0.58 kg/km/pax** Fuel Consumption Rate

AIRCRAFT NOTES

- Supersonic cruise condition L/D = 5.6
- Supersonic cruise condition Isp = 1599 s
- Vehicle propellant mass fraction (PMF) = 0.47
- Takeoff T/W = 0.375
- Effective Dose Rate (51° Lat.) = 8.5 μSv/hr

NASA SBIR Contract #80NSSC22C0008

Jet-A Matrix – Aircraft 14

ID: JTA.M4.P20.R5400.20230518

Key Inputs

Mach 4
Cruise Speed

5,400 nmi
Range

20
Passenger Count

JetA
Fuel Type

OPERATOR METRICS

$16,500-$20,800
Ticket Price

0.1M
Pax/Year

13
Routes Captured

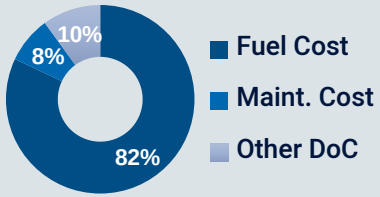

MANUFACTURER METRICS

$444M
Aircraft Price

$261M
Airframe Price

$46M x4
Engine Price

64
Aircraft Sold

KEY EVENTS & DATES

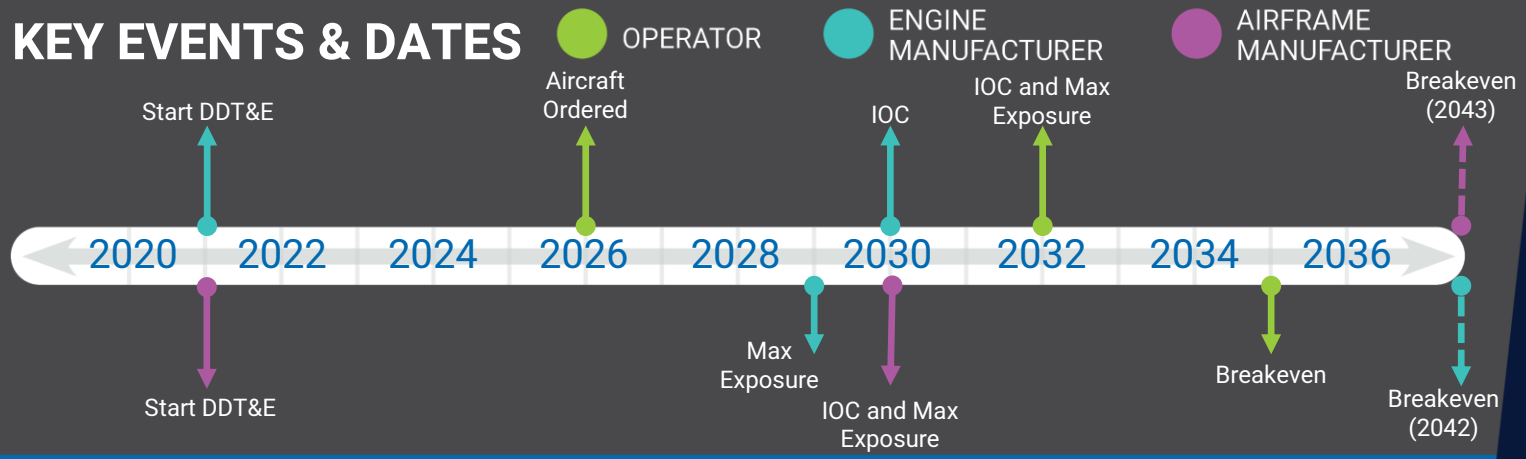

Business Results

OPERATOR

6%
ROIC (avg)

$488M
NPV

$1.5B
Max Exposure

ENGINE MANUFACTURER

5%
IRR

$-1.7B
NPV

$5.7B
Max Exposure

AIRFRAME MANUFACTURER

5%
IRR

$-4.3B
NPV

$15B
Max Exposure

BUSINESS CASE ANALYSIS

This aircraft is capturing 13 of 72 addressable routes that are within its design range which are a mix of Atlantic & Pacific Ocean routes.

NASA SBIR Contract #80NSSC22C0008

Jet-A Matrix – Aircraft 15

ID: JTA.M5.P20.R5000.20230518

Mach 5
Cruise Speed

5,000 nmi
Max Range

20
Passenger Count

JetA
Fuel Type

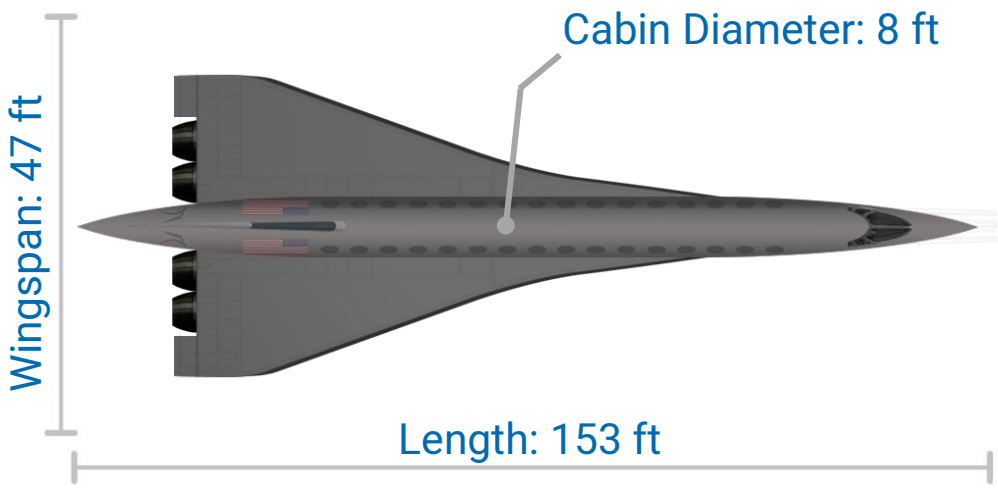

COST METRICS (FY21 USD)

DDT&E

$11B Airframe

$5.9B Engine

TFU

$170M Airframe

$57M Engine

ENVIRONMENTAL METRICS

95 EPNdB
Lateral Takeoff Noise

102 PNLdB
Sonic Boom

1.96 kg/km/pax
Emissions (CO_2e)

0.61 kg/km/pax
Fuel Consumption Rate

381,000 lbm
MTOW

126,000 lbm
MEW

4 x 35,700 lbf
Engine Thrust SLS

2.4 hours
Gate-to-Gate Time
at Max Range

95,100 ft
Cruise Altitude

10,400 ft
Bal. Field Length SL

AIRCRAFT NOTES

- Supersonic cruise condition L/D = 5.1
- Supersonic cruise condition Isp = 1299 s
- Vehicle propellant mass fraction (PMF) = 0.47
- Takeoff T/W = 0.375
- Effective Dose Rate (51° Lat.) = 8.1 μSv/hr

NASA SBIR Contract #80NSSC22C0008

Jet-A Matrix – Aircraft 15

SpaceWorks

NASA

ID: JTA.M5.P20.R5000.20230518

Key Inputs

Mach 5
Cruise Speed

5,000 nmi
Range

20
Passenger Count

JetA
Fuel Type

OPERATOR METRICS

$17,900-$21,900
Ticket Price

0.1M
Pax/Year

15
Routes Captured

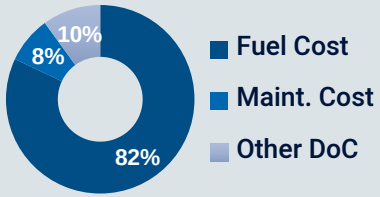

MANUFACTURER METRICS

$464M
Aircraft Price

$238M
Airframe Price

$57M x4
Engine Price

73
Aircraft Sold

KEY EVENTS & DATES

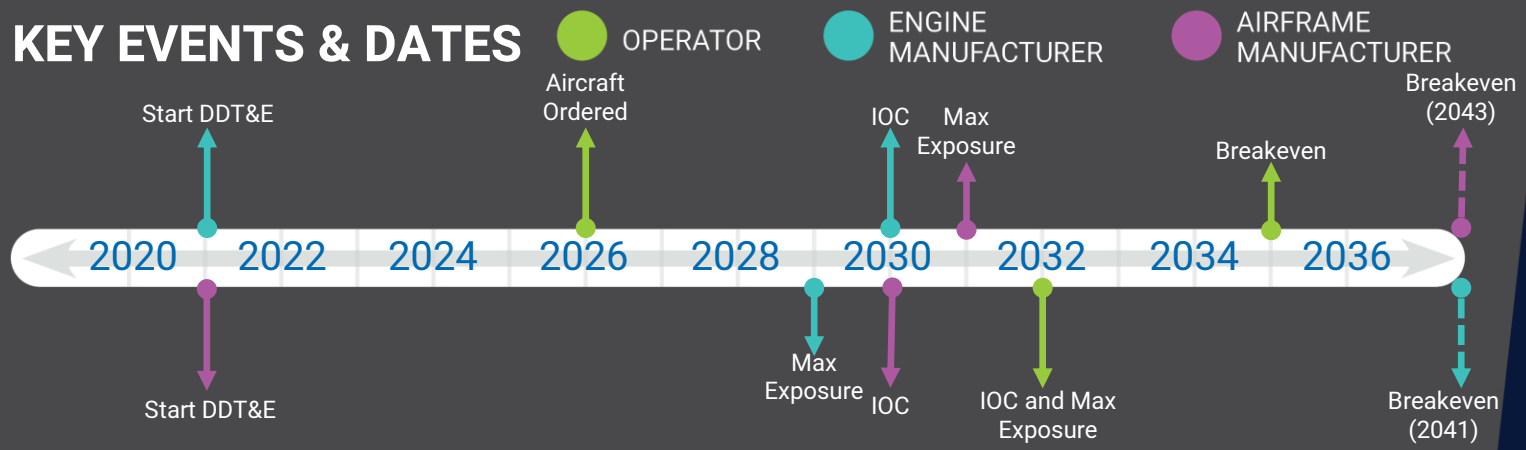

Business Results

OPERATOR

2%
ROIC (avg)

$664M
NPV

$1.9B
Max Exposure

ENGINE MANUFACTURER

6%
IRR

$-1.9B
NPV

$6.5B
Max Exposure

AIRFRAME MANUFACTURER

5%
IRR

$-4.6B
NPV

$15B
Max Exposure

BUSINESS CASE ANALYSIS

This aircraft is capturing 15 of 66 addressable routes that are within its design range which are a mix of Atlantic & Pacific Ocean routes.

NASA SBIR Contract #80NSSC22C0008

Jet-A Matrix – Aircraft 16

ID: JTA.M1.5.P50.R6510.20230518

Mach 1.5
Cruise Speed

6,510 nmi
Max Range

50
Passenger Count

JetA
Fuel Type

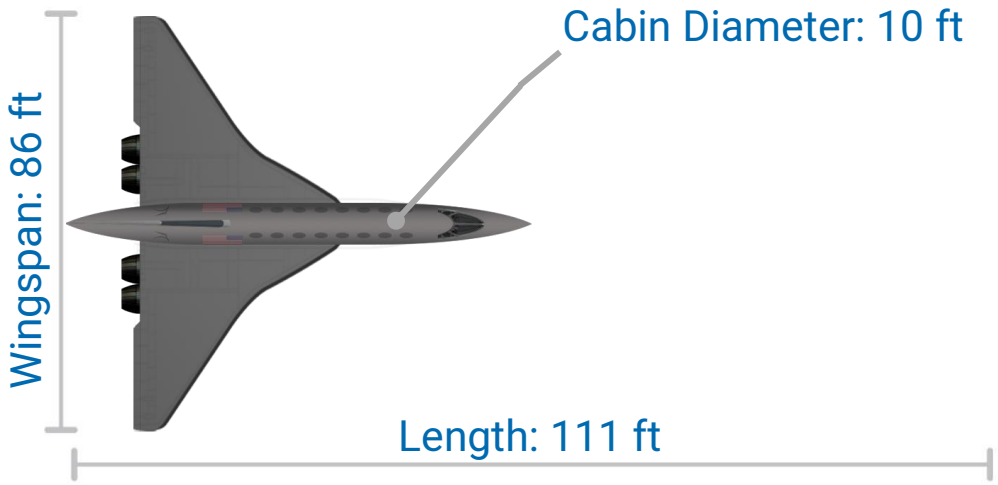

246,000 lbm MTOW	**87,600 lbm** MEW	**4 x 23,000 lbf** Engine Thrust SLS
8.4 hours Gate-to-Gate Time at Max Range	**44,400 ft** Cruise Altitude	**6,000 ft** Bal. Field Length SL

COST METRICS (FY21 USD)

DDT&E		TFU	
$8.5B Airframe	**$2.7B** Engine	**$120M** Airframe	**$14M** Engine

ENVIRONMENTAL METRICS

93 EPNdB Lateral Takeoff Noise	**0.35 kg/km/pax** Emissions (CO_2e)
107 PNLdB Sonic Boom	**0.11 kg/km/pax** Fuel Consumption Rate

AIRCRAFT NOTES

- Supersonic cruise condition L/D = 9.6
- Supersonic cruise condition Isp = 3991 s
- Vehicle propellant mass fraction (PMF) = 0.47
- Takeoff T/W = 0.375
- Effective Dose Rate (51° Lat.) = 6.4 μSv/hr

NASA SBIR Contract #80NSSC22C0008

Jet-A Matrix – Aircraft 16

ID: JTA.M1.5.P50.R6510.20230518

Key Inputs

Mach 1.5 Cruise Speed

6,510 nmi Range

50 Passenger Count

JetA Fuel Type

OPERATOR METRICS

$7,500-$10,000 Ticket Price

0.6M Pax/Year

25 Routes Captured

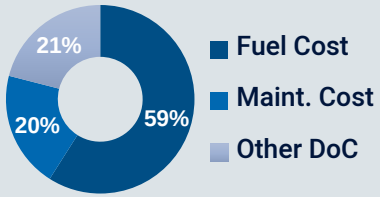

MANUFACTURER METRICS

$560M Aircraft Price

$442M Airframe Price

$30M x4 Engine Price

160 Aircraft Sold

KEY EVENTS & DATES

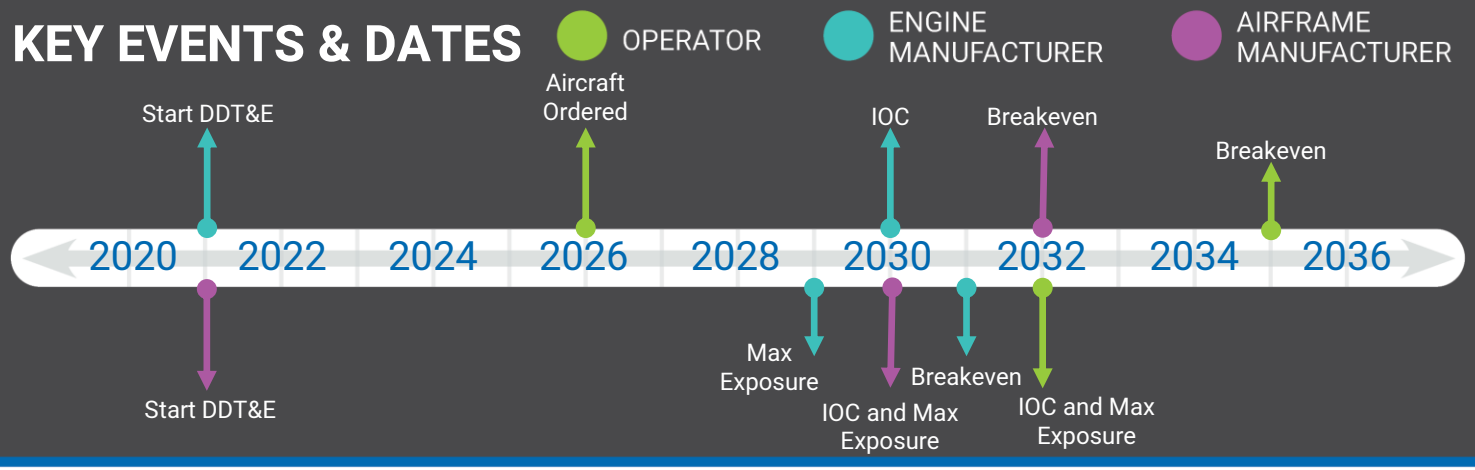

Business Results

OPERATOR

9% ROIC (avg)

$1.6B NPV

$5.5B Max Exposure

ENGINE MANUFACTURER

21% IRR

$869M NPV

$2.4B Max Exposure

AIRFRAME MANUFACTURER

21% IRR

$3.4B NPV

$9.2B Max Exposure

BUSINESS CASE ANALYSIS

This aircraft is capturing 25 of 84 addressable routes that are within its design range which are a mix of Atlantic & Pacific Ocean routes.

NASA SBIR Contract #80NSSC22C0008

Jet-A Matrix – Aircraft 17

ID: JTA.M2.P50.R6100.20230518

Mach 2
Cruise Speed

6,100 nmi
Max Range

50
Passenger Count

JetA
Fuel Type

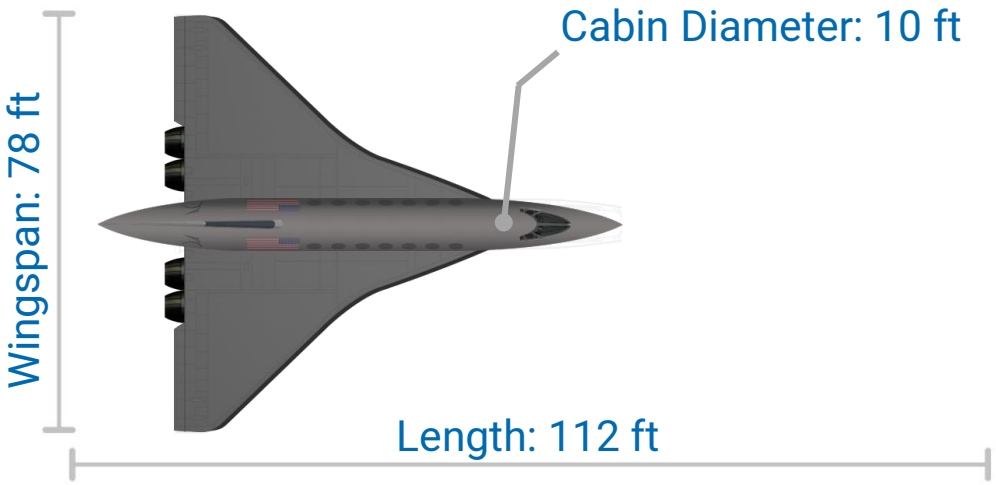

COST METRICS (FY21 USD)

DDT&E

$9.8B Airframe

$3.3B Engine

TFU

$143M Airframe

$21M Engine

ENVIRONMENTAL METRICS

94 EPNdB
Lateral Takeoff Noise

106 PNLdB
Sonic Boom

0.51 kg/km/pax
Emissions (CO2e)

0.16 kg/km/pax
Fuel Consumption Rate

315,000 lbm
MTOW

103,800 lbm
MEW

4 x 29,500 lbf
Engine Thrust SLS

6.2 hours
Gate-to-Gate Time
at Max Range

56,300 ft
Cruise Altitude

6,600 ft
Bal. Field Length SL

AIRCRAFT NOTES

- Supersonic cruise condition L/D = 8
- Supersonic cruise condition Isp = 3000 s
- Vehicle propellant mass fraction (PMF) = 0.47
- Takeoff T/W = 0.375
- Effective Dose Rate (51° Lat.) = 9.0 μSv/hr

NASA SBIR Contract #80NSSC22C0008

Jet-A Matrix – Aircraft 17

SpaceWorks® NASA

ID: JTA.M2.P50.R6100.20230518

Key Inputs

Mach 2
Cruise Speed

6,100 nmi
Range

50
Passenger Count

JetA
Fuel Type

OPERATOR METRICS

$7,400-$9,600
Ticket Price

0.6M
Pax/Year

25
Routes Captured

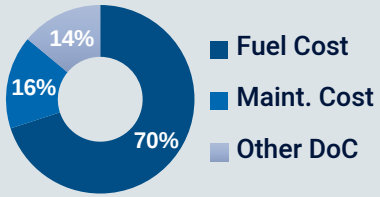

MANUFACTURER METRICS

$654M
Aircraft Price

$499M
Airframe Price

$39M x4
Engine Price

127
Aircraft Sold

KEY EVENTS & DATES

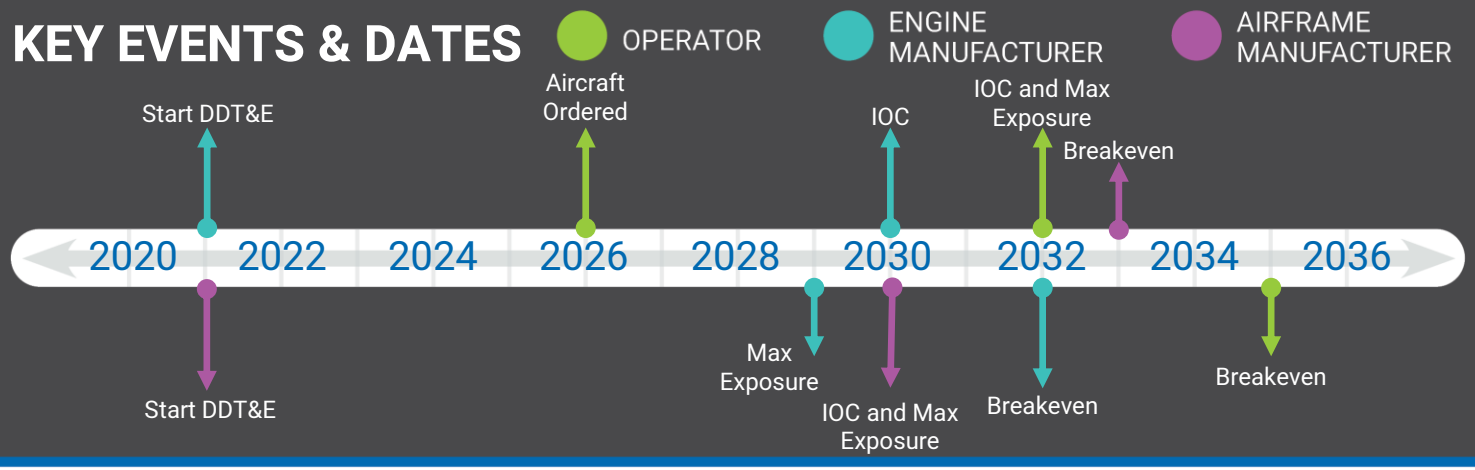

Business Results

OPERATOR

7%
ROIC (avg)

$1.6B
NPV

$4.8B
Max Exposure

ENGINE MANUFACTURER

18%
IRR

$458M
NPV

$3.2B
Max Exposure

AIRFRAME MANUFACTURER

18%
IRR

$1.6B
NPV

$11B
Max Exposure

BUSINESS CASE ANALYSIS

This aircraft is capturing 25 of 80 addressable routes that are within its design range which are a mix of Atlantic & Pacific Ocean routes.

NASA SBIR Contract #80NSSC22C0008

Jet-A Matrix – Aircraft 18

ID: JTA.M3.P50.R5700.20230518

Mach 3
Cruise Speed

5,700 nmi
Max Range

50
Passenger Count

JetA
Fuel Type

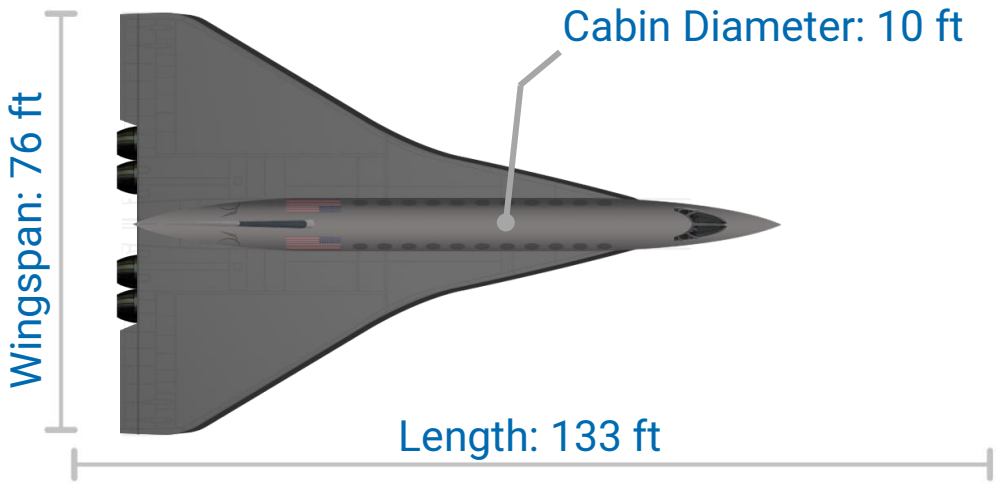

COST METRICS (FY21 USD)

DDT&E

$14B Airframe

$5.0B Engine

TFU

$220M Airframe

$49M Engine

ENVIRONMENTAL METRICS

97 EPNdB
Lateral Takeoff Noise

106 PNLdB
Sonic Boom

1.02 kg/km/pax
Emissions (CO_2e)

0.32 kg/km/pax
Fuel Consumption Rate

546,000 lbm
MTOW

163,500 lbm
MEW

4 x 51,100 lbf
Engine Thrust SLS

4.1 hours
Gate-to-Gate Time
at Max Range

73,300 ft
Cruise Altitude

7,800 ft
Bal. Field Length SL

AIRCRAFT NOTES

- Supersonic cruise condition L/D = 6.4
- Supersonic cruise condition Isp = 2000 s
- Vehicle propellant mass fraction (PMF) = 0.47
- Takeoff T/W = 0.375
- Effective Dose Rate (51° Lat.) = 9.1 μSv/hr

NASA SBIR Contract #80NSSC22C0008

Jet-A Matrix – Aircraft 18

ID: JTA.M3.P50.R5700.20230518

Key Inputs

Mach 3
Cruise Speed

5,700 nmi
Range

50
Passenger Count

JetA
Fuel Type

OPERATOR METRICS

$11,600-$14,800
Ticket Price

0.2M
Pax/Year

9
Routes Captured

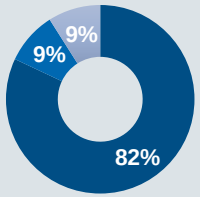

MANUFACTURER METRICS

$745M
Aircraft Price

$495M
Airframe Price

$62M x4
Engine Price

50
Aircraft Sold

KEY EVENTS & DATES

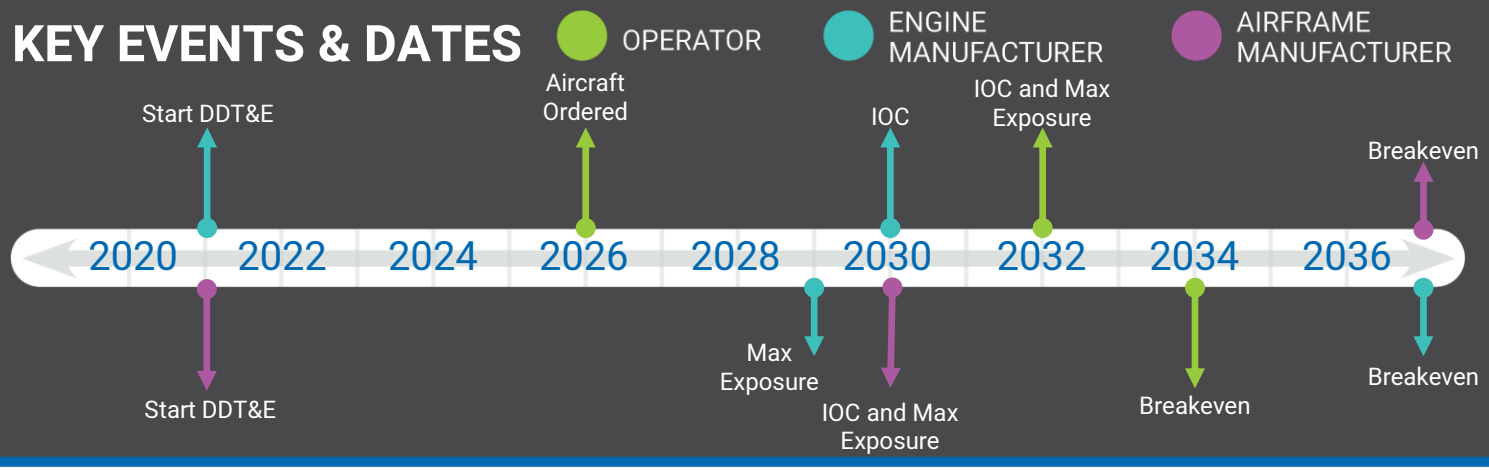

Business Results

OPERATOR

4%
ROIC (avg)

$557M
NPV

$1.9B
Max Exposure

ENGINE MANUFACTURER

9%
IRR

$-1.1B
NPV

$5.7B
Max Exposure

AIRFRAME MANUFACTURER

9%
IRR

$-3.4B
NPV

$18B
Max Exposure

BUSINESS CASE ANALYSIS

This aircraft is capturing 9 of 78 addressable routes that are within its design range which are a mix of Atlantic & Pacific Ocean routes.

NASA SBIR Contract #80NSSC22C0008

Jet-A Matrix – Aircraft 19

ID: JTA.M4.P50.R5400.20230518

Mach 4
Cruise Speed

5,400 nmi
Max Range

50
Passenger Count

JetA
Fuel Type

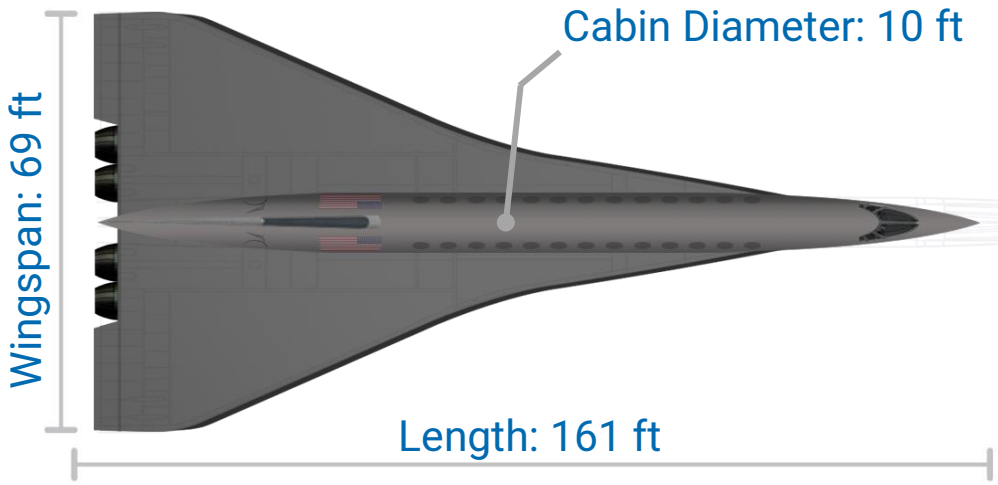

COST METRICS (FY21 USD)

DDT&E

$16B Airframe

$6.3B Engine

TFU

$253M Airframe

$75M Engine

ENVIRONMENTAL METRICS

98 EPNdB
Lateral Takeoff Noise

105 PNLdB
Sonic Boom

1.24 kg/km/pax
Emissions (CO_2e)

0.39 kg/km/pax
Fuel Consumption Rate

635,000 lbm
MTOW

194,500 lbm
MEW

4 x 59,500 lbf
Engine Thrust SLS

3.1 hours
Gate-to-Gate Time
at Max Range

85,500 ft
Cruise Altitude

9,100 ft
Bal. Field Length SL

AIRCRAFT NOTES

- Supersonic cruise condition L/D = 5.6
- Supersonic cruise condition Isp = 1599 s
- Vehicle propellant mass fraction (PMF) = 0.47
- Takeoff T/W = 0.375
- Effective Dose Rate (51° Lat.) = 8.5 μSv/hr

NASA SBIR Contract #80NSSC22C0008

Jet-A Matrix – Aircraft 19

ID: JTA.M4.P50.R5400.20230518

Key Inputs

Mach 4
Cruise Speed

5,400 nmi
Range

50
Passenger Count

JetA
Fuel Type

OPERATOR METRICS

$11,900-$15,000
Ticket Price

0.2M
Pax/Year

8
Routes Captured

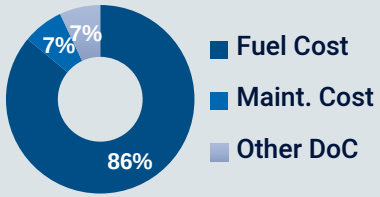

MANUFACTURER METRICS

$702M
Aircraft Price

$402M
Airframe Price

$75M x4
Engine Price

46
Aircraft Sold

KEY EVENTS & DATES

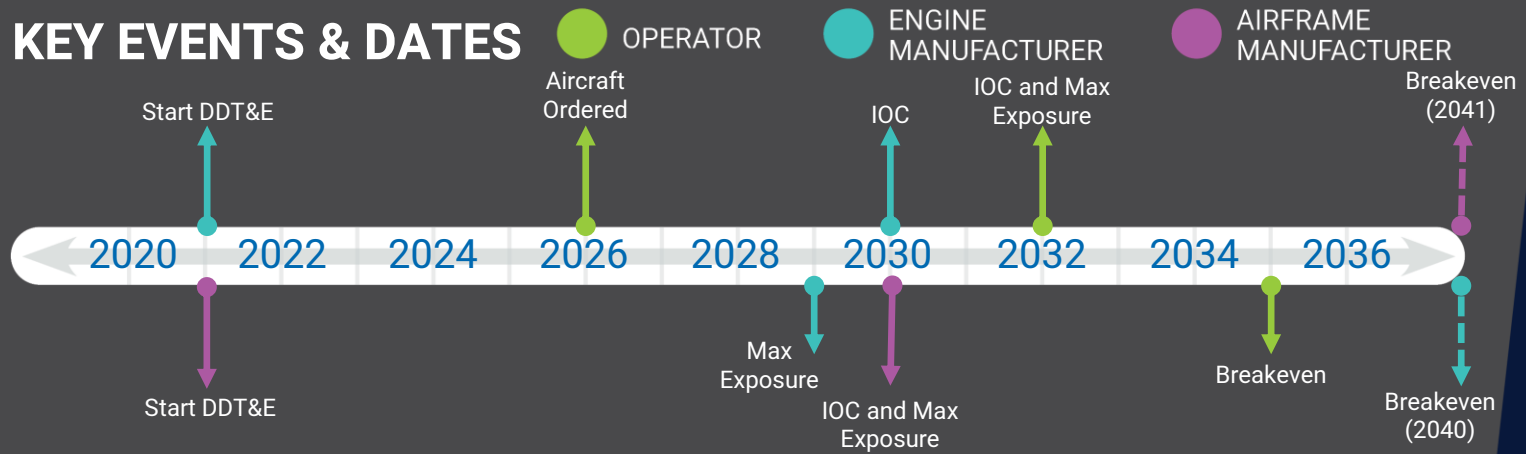

Business Results

OPERATOR

3%
ROIC (avg)

$487M
NPV

$1.7B
Max Exposure

ENGINE MANUFACTURER

6%
IRR

$-2.0B
NPV

$7.2B
Max Exposure

AIRFRAME MANUFACTURER

6%
IRR

$-5.5B
NPV

$21B
Max Exposure

BUSINESS CASE ANALYSIS

This aircraft is capturing 8 of 72 addressable routes that are within its design range which are a mix of Atlantic & Pacific Ocean routes.

NASA SBIR Contract #80NSSC22C0008

Jet-A Matrix – Aircraft 20

ID: JTA.M5.P50.R5000.20230518

Mach 5
Cruise Speed

5,000 nmi
Max Range

50
Passenger Count

JetA
Fuel Type

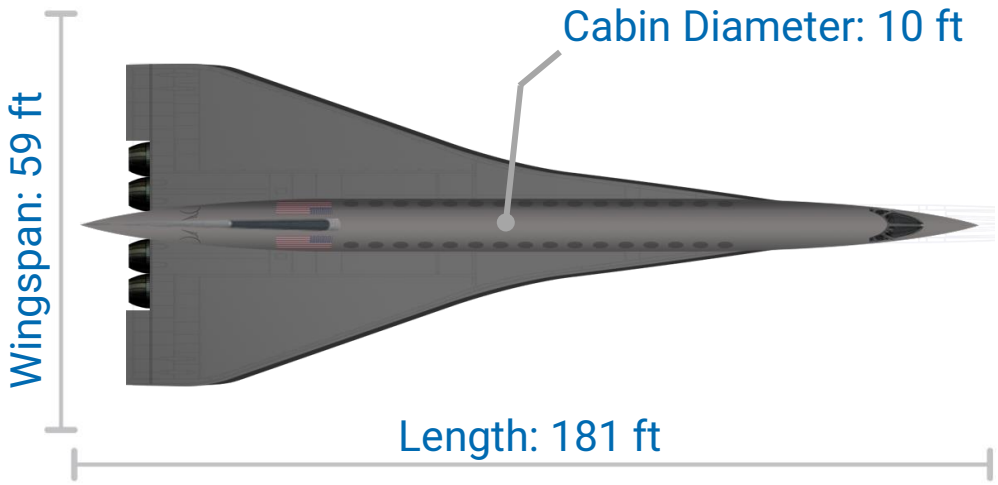

COST METRICS (FY21 USD)

DDT&E

$16B Airframe

$7.2B Engine

TFU

$253M Airframe

$91M Engine

ENVIRONMENTAL METRICS

98 EPNdB
Lateral Takeoff Noise

104 PNLdB
Sonic Boom

1.26 kg/km/pax
Emissions (CO_2e)

0.39 kg/km/pax
Fuel Consumption Rate

616,000 lbm
MTOW

200,400 lbm
MEW

4 x 57,700 lbf
Engine Thrust SLS

2.4 hours
Gate-to-Gate Time
at Max Range

95,100 ft
Cruise Altitude

10,400 ft
Bal. Field Length SL

AIRCRAFT NOTES

- Supersonic cruise condition L/D = 5.1
- Supersonic cruise condition Isp = 1299 s
- Vehicle propellant mass fraction (PMF) = 0.47
- Takeoff T/W = 0.375
- Effective Dose Rate (51° Lat.) = 8.1 μSv/hr

NASA SBIR Contract #80NSSC22C0008

Jet-A Matrix – Aircraft 20

SpaceWorks

NASA

ID: JTA.M5.P50.R5000.20230518

Key Inputs

Mach 5
Cruise Speed

5,000 nmi
Range

50
Passenger Count

JetA
Fuel Type

OPERATOR METRICS

$13,100-$16,000
Ticket Price

0.1M
Pax/Year

8
Routes Captured

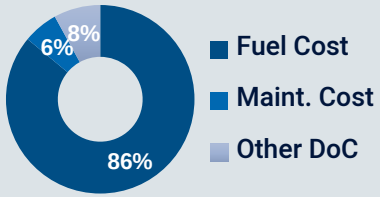

MANUFACTURER METRICS

$742M
Aircraft Price

$376M
Airframe Price

$91M x4
Engine Price

48
Aircraft Sold

KEY EVENTS & DATES

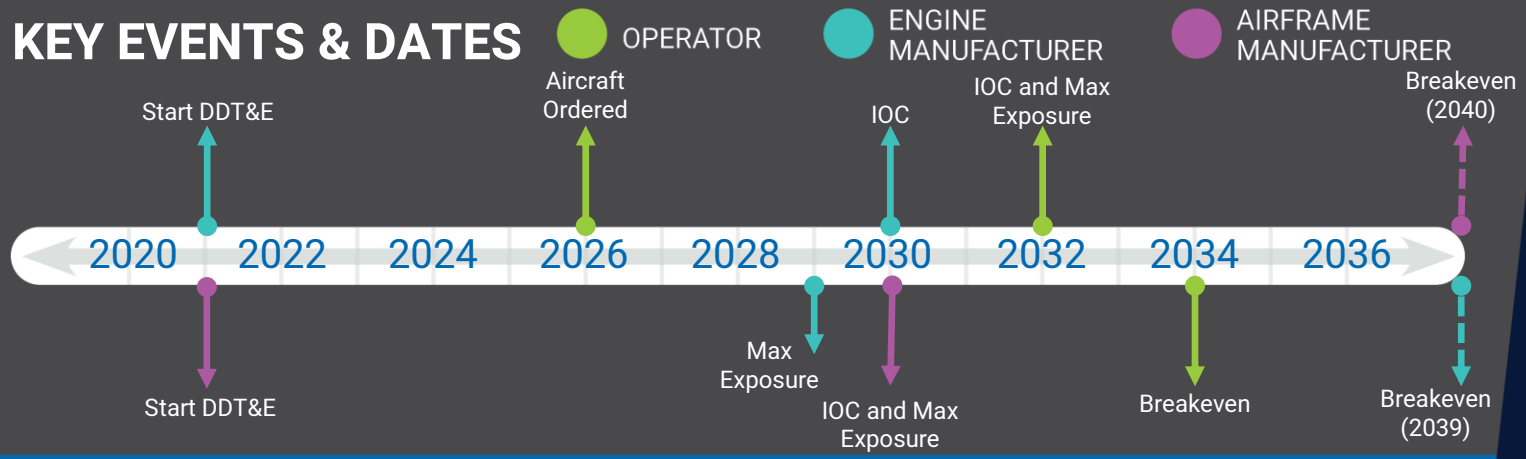

Business Results

OPERATOR

3%
ROIC (avg)

$570M
NPV

$1.9B
Max Exposure

ENGINE MANUFACTURER

7%
IRR

$-2.1B
NPV

$8.2B
Max Exposure

AIRFRAME MANUFACTURER

7%
IRR

$-5.4B
NPV

$21B
Max Exposure

BUSINESS CASE ANALYSIS

This aircraft is capturing 8 of 66 addressable routes that are within its design range which are a mix of Atlantic & Pacific Ocean routes.

NASA SBIR Contract #80NSSC22C0008

SAF Aircraft

- Cost Metrics and Financials updated with latest Market Data

NASA SBIR Contract #80NSSC22C0008

SAF Matrix – Aircraft 1

ID: SAF.M1.5.P20.R4000.20230518

Mach 1.5
Cruise Speed

4,000 nmi
Max Range

20
Passenger Count

SAF
Fuel Type

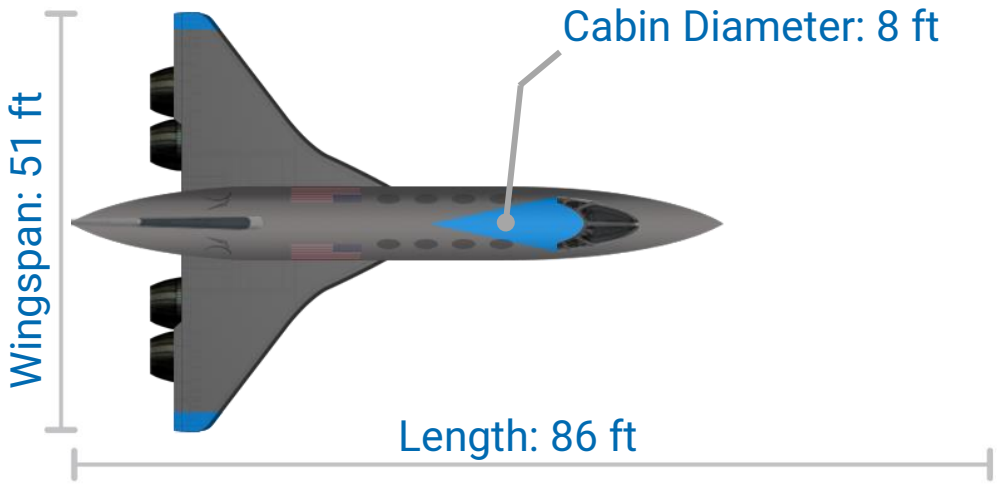

COST METRICS (FY21 USD)

DDT&E

$4.5B Airframe

$1.7B Engine

TFU

$56M Airframe

$4.5M Engine

ENVIRONMENTAL METRICS

89 EPNdB
Lateral Takeoff Noise

104 PNLdB
Sonic Boom

0.33 kg/km/pax
Emissions (CO_2e)

0.1 kg/km/pax
Fuel Consumption Rate

77,000 lbm
MTOW

35,900 lbm
MEW

4 x 7,200 lbf
Engine Thrust SLS

5.5 hours
Gate-to-Gate Time
at Max Range

44,400 ft
Cruise Altitude

6,000 ft
Bal. Field Length SL

AIRCRAFT NOTES

- Supersonic cruise condition L/D = 9.6
- Supersonic cruise condition Isp = 4070 s
- Vehicle propellant mass fraction (PMF) = 0.47
- Takeoff T/W = 0.375
- Effective Dose Rate (51° Lat.) = 6.4 μSv/hr

NASA SBIR Contract #80NSSC22C0008

SAF Matrix – Aircraft 1

SpaceWorks

NASA

ID: SAF.M1.5.P20.R4000.20230518

Key Inputs

Mach 1.5
Cruise Speed

4,000 nmi
Range

20
Passenger Count

SAF
Fuel Type

OPERATOR METRICS

$5,500-$6,200
Ticket Price

0.6M
Pax/Year

23
Routes Captured

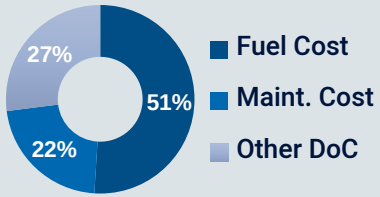

MANUFACTURER METRICS

$260M
Aircraft Price

$205M
Airframe Price

$14M x4
Engine Price

280
Aircraft Sold

KEY EVENTS & DATES

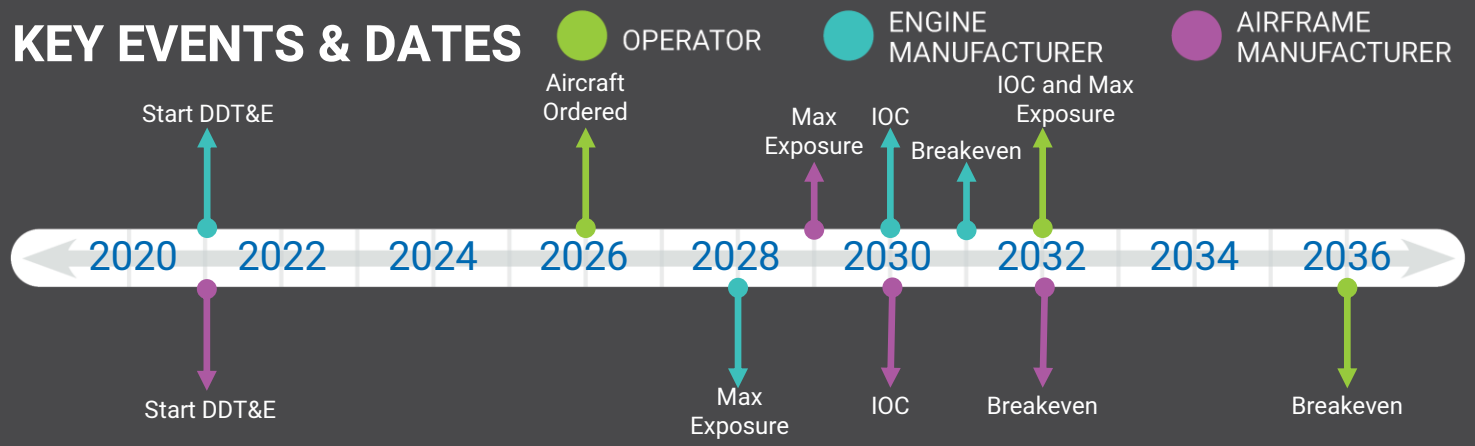

Business Results

OPERATOR

10%
ROIC (avg)

$947M
NPV

$4.1B
Max Exposure

ENGINE MANUFACTURER

24%
IRR

$816M
NPV

$1.4B
Max Exposure

AIRFRAME MANUFACTURER

24%
IRR

$2.8B
NPV

$4.9B
Max Exposure

BUSINESS CASE ANALYSIS

This aircraft is capturing 23 of 37 addressable routes that are within its design range which are exclusively Atlantic Ocean routes.

NASA SBIR Contract #80NSSC22C0008

SAF Matrix – Aircraft 2

ID: SAF.M2.P20.R4000.20230518

Mach 2
Cruise Speed

4,000 nmi
Max Range

20
Passenger Count

SAF
Fuel Type

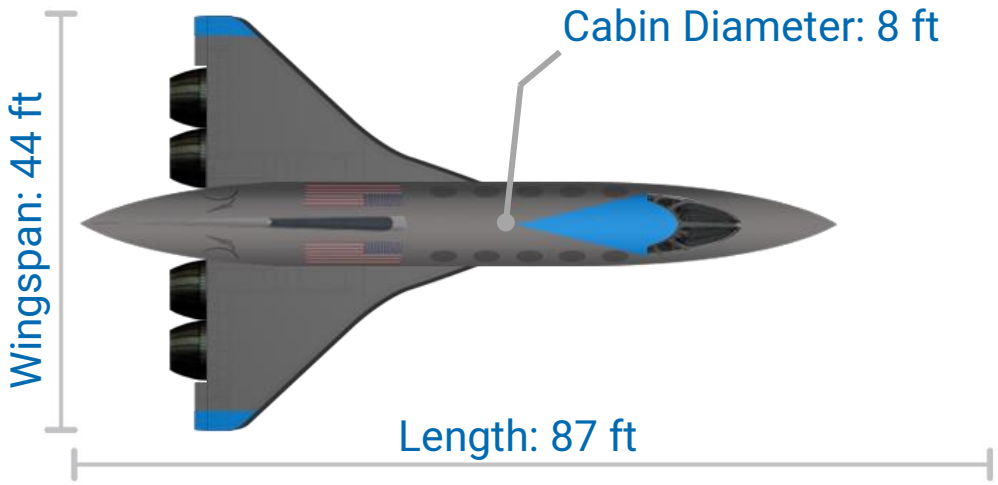

COST METRICS (FY21 USD)

DDT&E

$4.9B Airframe

$2.0B Engine

TFU

$63M Airframe

$6.4M Engine

ENVIRONMENTAL METRICS

90 EPNdB
Lateral Takeoff Noise

102 PNLdB
Sonic Boom

0.45 kg/km/pax
Emissions (CO_2e)

0.14 kg/km/pax
Fuel Consumption Rate

92,000 lbm
MTOW

39,700 lbm
MEW

4 x 8,700 lbf
Engine Thrust SLS

4.4 hours
Gate-to-Gate Time
at Max Range

56,300 ft
Cruise Altitude

6,600 ft
Bal. Field Length SL

AIRCRAFT NOTES

- Supersonic cruise condition L/D = 8
- Supersonic cruise condition Isp = 3060 s
- Vehicle propellant mass fraction (PMF) = 0.47
- Takeoff T/W = 0.375
- Effective Dose Rate (51° Lat.) = 9.0 μSv/hr

NASA SBIR Contract #80NSSC22C0008

SAF Matrix – Aircraft 2

SpaceWorks

NASA

ID: SAF.M2.P20.R4000.20230518

Key Inputs

Mach 2
Cruise Speed

4,000 nmi
Range

20
Passenger Count

SAF
Fuel Type

OPERATOR METRICS

$5,100-$5,800
Ticket Price

0.7M
Pax/Year

25
Routes Captured

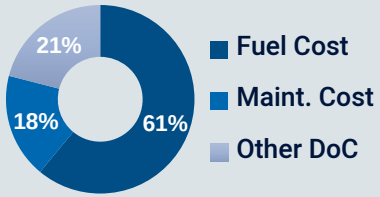

MANUFACTURER METRICS

$247M
Aircraft Price

$190M
Airframe Price

$14M x4
Engine Price

306
Aircraft Sold

KEY EVENTS & DATES

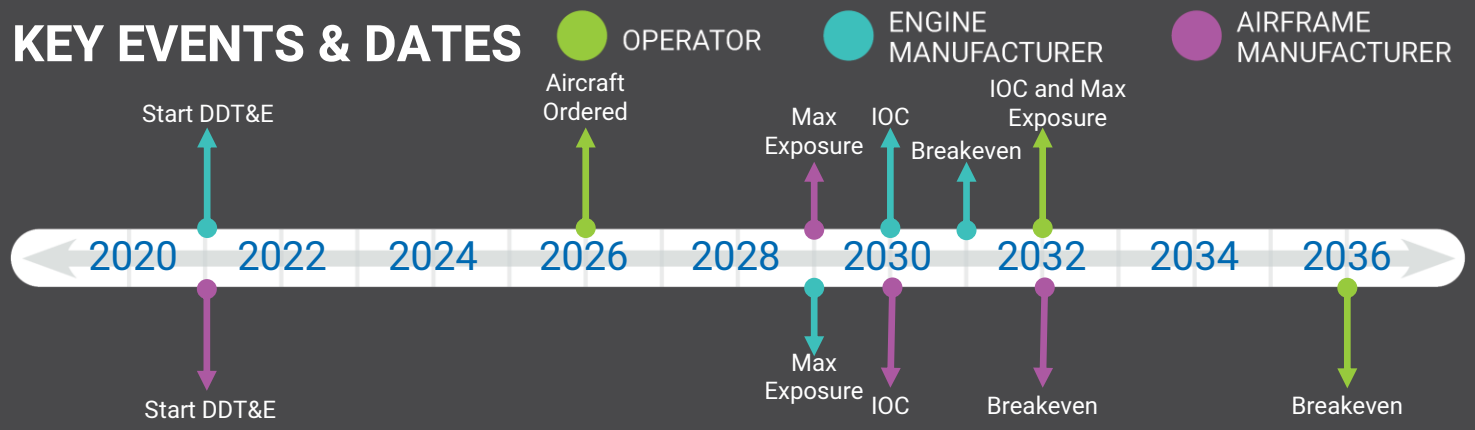

Business Results

OPERATOR

10%
ROIC (avg)

$1.2B
NPV

$4.1B
Max Exposure

ENGINE MANUFACTURER

23%
IRR

$803M
NPV

$1.7B
Max Exposure

AIRFRAME MANUFACTURER

23%
IRR

$2.6B
NPV

$5.4B
Max Exposure

BUSINESS CASE ANALYSIS

This aircraft is capturing 25 of 37 addressable routes that are within its design range which are exclusively Atlantic Ocean routes.

NASA SBIR Contract #80NSSC22C0008

SAF Matrix – Aircraft 3

ID: SAF.M3.P20.R4000.20230518

Mach 3
Cruise Speed

4,000 nmi
Max Range

20
Passenger Count

SAF
Fuel Type

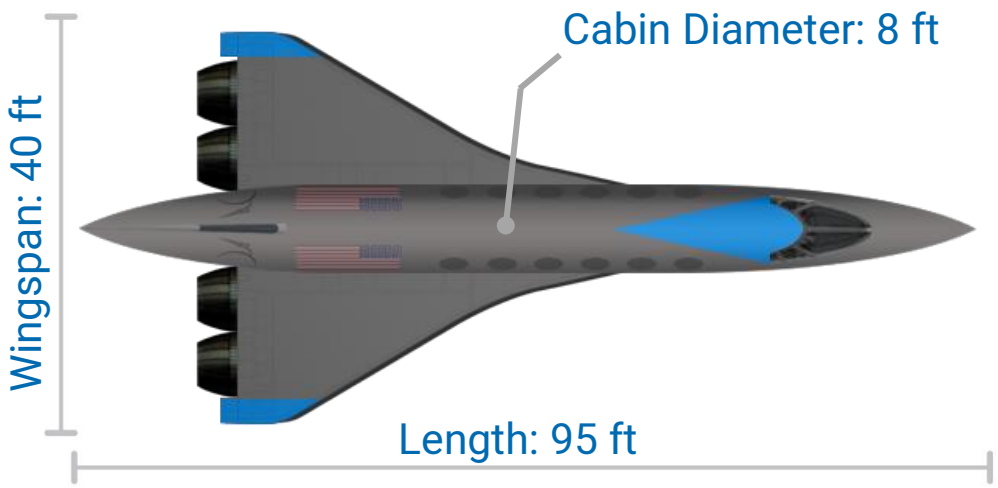

COST METRICS (FY21 USD)

DDT&E

$5.9B Airframe

$2.9B Engine

TFU

$79M Airframe

$12M Engine

ENVIRONMENTAL METRICS

91 EPNdB
Lateral Takeoff Noise

101 PNLdB
Sonic Boom

0.72 kg/km/pax
Emissions (CO_2e)

0.22 kg/km/pax
Fuel Consumption Rate

130,000 lbm
MTOW

50,400 lbm
MEW

4 x 12,200 lbf
Engine Thrust SLS

3.1 hours
Gate-to-Gate Time
at Max Range

73,300 ft
Cruise Altitude

7,800 ft
Bal. Field Length SL

AIRCRAFT NOTES

- Supersonic cruise condition L/D = 6.4
- Supersonic cruise condition Isp = 2040 s
- Vehicle propellant mass fraction (PMF) = 0.47
- Takeoff T/W = 0.375
- Effective Dose Rate (51° Lat.) = 9.1 μSv/hr

NASA SBIR Contract #80NSSC22C0008

SAF Matrix – Aircraft 3

ID: SAF.M3.P20.R4000.20230518

Key Inputs

Mach 3
Cruise Speed

4,000 nmi
Range

20
Passenger Count

SAF
Fuel Type

OPERATOR METRICS

$7,700-$8,700
Ticket Price

0.4M
Pax/Year

21
Routes Captured

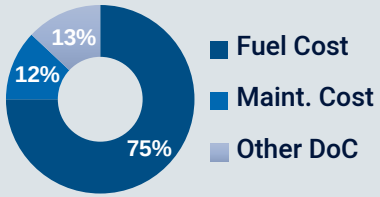

MANUFACTURER METRICS

$421M
Aircraft Price

$304M
Airframe Price

$29M x4
Engine Price

151
Aircraft Sold

KEY EVENTS & DATES

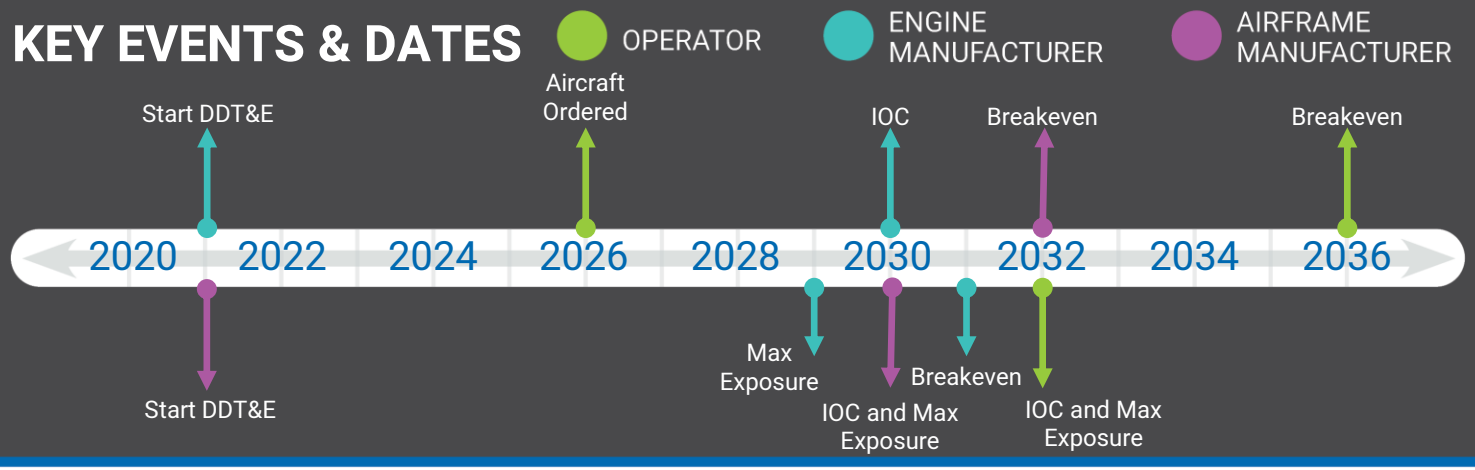

Business Results

OPERATOR

8%
ROIC (avg)

$592M
NPV

$3.9B
Max Exposure

ENGINE MANUFACTURER

20%
IRR

$739M
NPV

$2.7B
Max Exposure

AIRFRAME MANUFACTURER

20%
IRR

$2.1B
NPV

$7.2B
Max Exposure

BUSINESS CASE ANALYSIS

This aircraft is capturing 21 of 37 addressable routes that are within its design range which are exclusively Atlantic Ocean routes.

NASA SBIR Contract #80NSSC22C0008

SAF Matrix – Aircraft 4

ID: SAF.M4.P20.R4000.20230518

Mach 4
Cruise Speed

4,000 nmi
Max Range

20
Passenger Count

SAF
Fuel Type

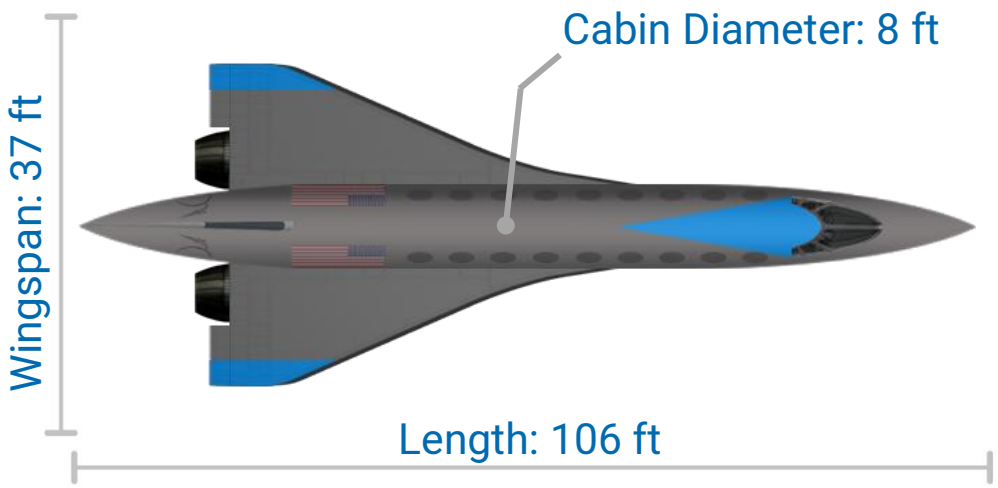

COST METRICS (FY21 USD)

DDT&E

$6.6B Airframe

$3.6B Engine

TFU

$91M Airframe

$19M Engine

ENVIRONMENTAL METRICS

91 EPNdB
Lateral Takeoff Noise

101 PNLdB
Sonic Boom

0.87 kg/km/pax
Emissions (CO_2e)

0.27 kg/km/pax
Fuel Consumption Rate

154,000 lbm
MTOW

59,300 lbm
MEW

4 x 14,500 lbf
Engine Thrust SLS

2.5 hours
Gate-to-Gate Time
at Max Range

85,500 ft
Cruise Altitude

9,100 ft
Bal. Field Length SL

AIRCRAFT NOTES

- Supersonic cruise condition L/D = 5.6
- Supersonic cruise condition Isp = 1631 s
- Vehicle propellant mass fraction (PMF) = 0.47
- Takeoff T/W = 0.375
- Effective Dose Rate (51° Lat.) = 8.5 μSv/hr

NASA SBIR Contract #80NSSC22C0008

SAF Matrix – Aircraft 4

ID: SAF.M4.P20.R4000.20230518

Key Inputs

Mach 4
Cruise Speed

4,000 nmi
Range

20
Passenger Count

SAF
Fuel Type

OPERATOR METRICS

$8,200-$9,200
Ticket Price

0.4M
Pax/Year

21
Routes Captured

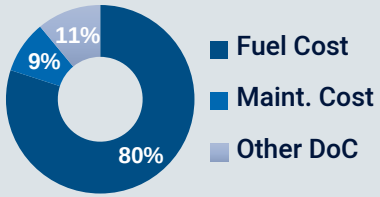

MANUFACTURER METRICS

$424M
Aircraft Price

$287M
Airframe Price

$34M x4
Engine Price

151
Aircraft Sold

KEY EVENTS & DATES

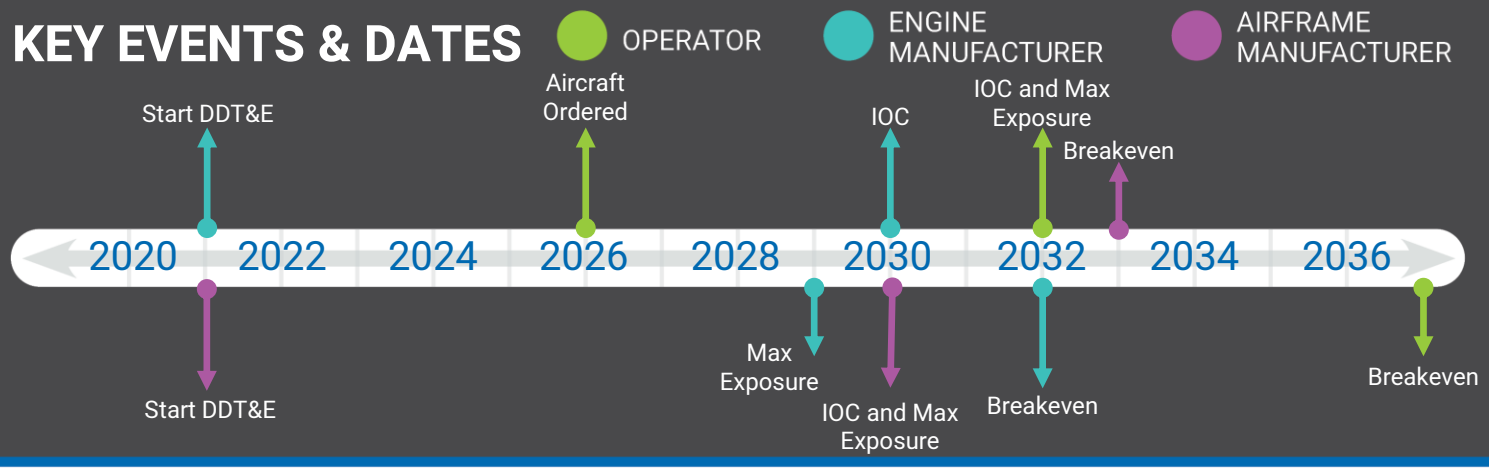

Business Results

OPERATOR

7%
ROIC (avg)

$515M
NPV

$4.0B
Max Exposure

ENGINE MANUFACTURER

18%
IRR

$494M
NPV

$3.5B
Max Exposure

AIRFRAME MANUFACTURER

18%
IRR

$1.2B
NPV

$8.5B
Max Exposure

BUSINESS CASE ANALYSIS

This aircraft is capturing 21 of 37 addressable routes that are within its design range which are exclusively Atlantic Ocean routes.

NASA SBIR Contract #80NSSC22C0008

SAF Matrix – Aircraft 5

ID: SAF.M5.P20.R4000.20230518

Mach 5
Cruise Speed

4,000 nmi
Max Range

20
Passenger Count

SAF
Fuel Type

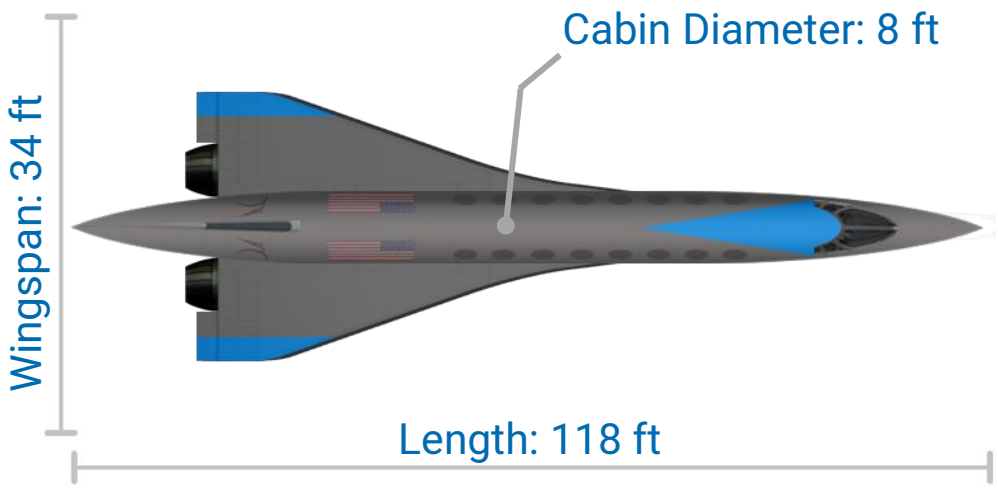

COST METRICS (FY21 USD)

DDT&E

$7.3B Airframe

$4.4B Engine

TFU

$103M Airframe

$27M Engine

ENVIRONMENTAL METRICS

92 EPNdB
Lateral Takeoff Noise

100 PNLdB
Sonic Boom

1 kg/km/pax
Emissions (CO2e)

0.31 kg/km/pax
Fuel Consumption Rate

178,000 lbm
MTOW

69,500 lbm
MEW

4 x 16,700 lbf
Engine Thrust SLS

2.1 hours
Gate-to-Gate Time
at Max Range

95,100 ft
Cruise Altitude

10,400 ft
Bal. Field Length SL

AIRCRAFT NOTES

- Supersonic cruise condition L/D = 5.1
- Supersonic cruise condition Isp = 1325 s
- Vehicle propellant mass fraction (PMF) = 0.47
- Takeoff T/W = 0.375
- Effective Dose Rate (51° Lat.) = 8.1 μSv/hr

NASA SBIR Contract #80NSSC22C0008

SAF Matrix – Aircraft 5

SpaceWorks

NASA

ID: SAF.M5.P20.R4000.20230518

Key Inputs

Mach 5
Cruise Speed

4,000 nmi
Range

20
Passenger Count

SAF
Fuel Type

OPERATOR METRICS

$8,900-$10,000
Ticket Price

0.4M
Pax/Year

21
Routes Captured

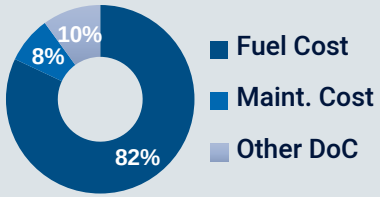

MANUFACTURER METRICS

$421M
Aircraft Price

$265M
Airframe Price

$39M x4
Engine Price

151
Aircraft Sold

KEY EVENTS & DATES

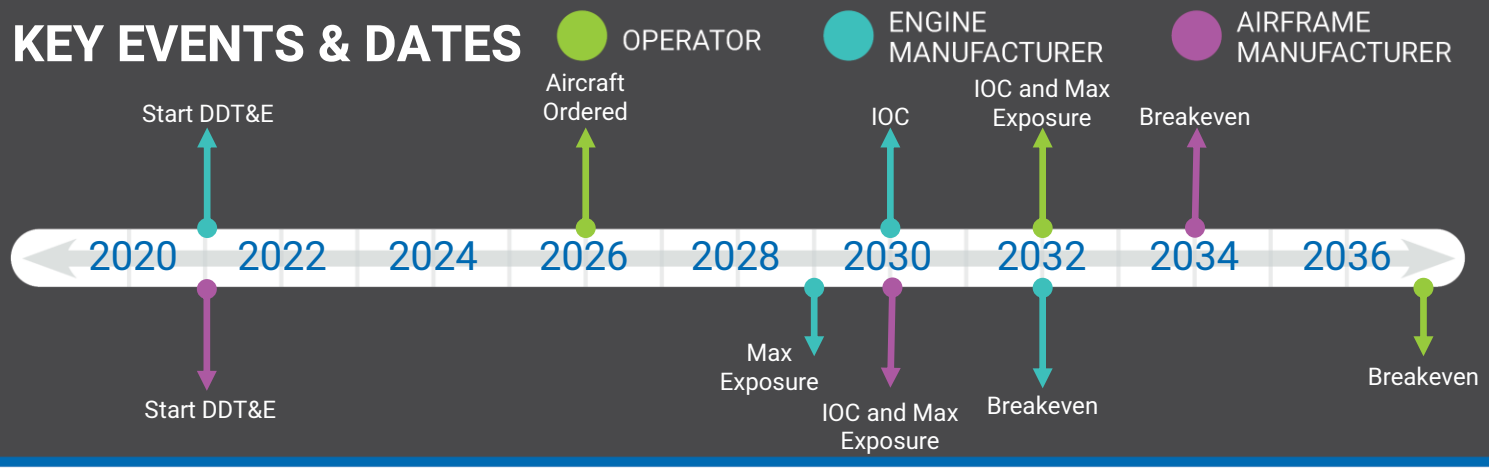

Business Results

OPERATOR

6%
ROIC (avg)

$444M
NPV

$4.0B
Max Exposure

ENGINE MANUFACTURER

15%
IRR

$124M
NPV

$4.3B
Max Exposure

AIRFRAME MANUFACTURER

15%
IRR

$278M
NPV

$9.7B
Max Exposure

BUSINESS CASE ANALYSIS

This aircraft is capturing 21 of 37 addressable routes that are within its design range which are exclusively Atlantic Ocean routes.

NASA SBIR Contract #80NSSC22C0008

SAF Matrix – Aircraft 6

ID: SAF.M1.5.P50.R4000.20230518

Mach 1.5
Cruise Speed

4,000 nmi
Max Range

50
Passenger Count

SAF
Fuel Type

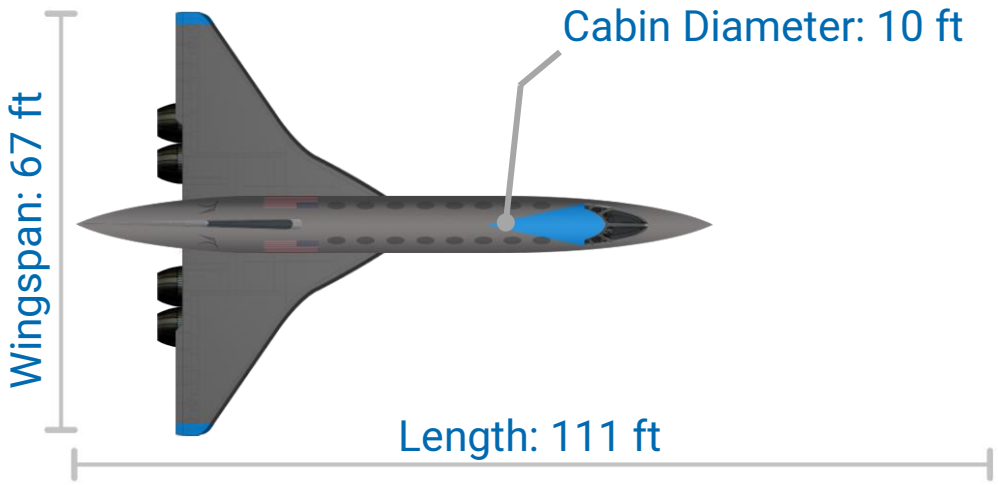

COST METRICS (FY21 USD)

DDT&E

$6.3B Airframe

$2.2B Engine

TFU

$84M Airframe

$8.0M Engine

ENVIRONMENTAL METRICS

91 EPNdB
Lateral Takeoff Noise

106 PNLdB
Sonic Boom

0.24 kg/km/pax
Emissions (CO_2e)

0.07 kg/km/pax
Fuel Consumption Rate

136,000 lbm
MTOW

61,400 lbm
MEW

4 x 12,800 lbf
Engine Thrust SLS

5.5 hours
Gate-to-Gate Time
at Max Range

44,400 ft
Cruise Altitude

6,000 ft
Bal. Field Length SL

AIRCRAFT NOTES

- Supersonic cruise condition L/D = 9.6
- Supersonic cruise condition Isp = 4070 s
- Vehicle propellant mass fraction (PMF) = 0.47
- Takeoff T/W = 0.375
- Effective Dose Rate (51° Lat.) = 6.4 μSv/hr

NASA SBIR Contract #80NSSC22C0008

SAF Matrix – Aircraft 6

SpaceWorks

NASA

ID: SAF.M1.5.P50.R4000.20230518

Key Inputs

Mach 1.5
Cruise Speed

4,000 nmi
Range

50
Passenger Count

SAF
Fuel Type

OPERATOR METRICS

$4,700-$5,300
Ticket Price

0.7M
Pax/Year

19
Routes Captured

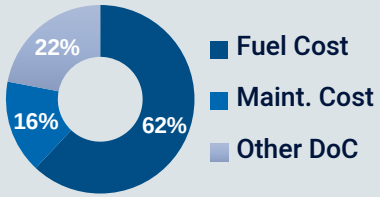

MANUFACTURER METRICS

$475M
Aircraft Price

$375M
Airframe Price

$25M x4
Engine Price

150
Aircraft Sold

KEY EVENTS & DATES

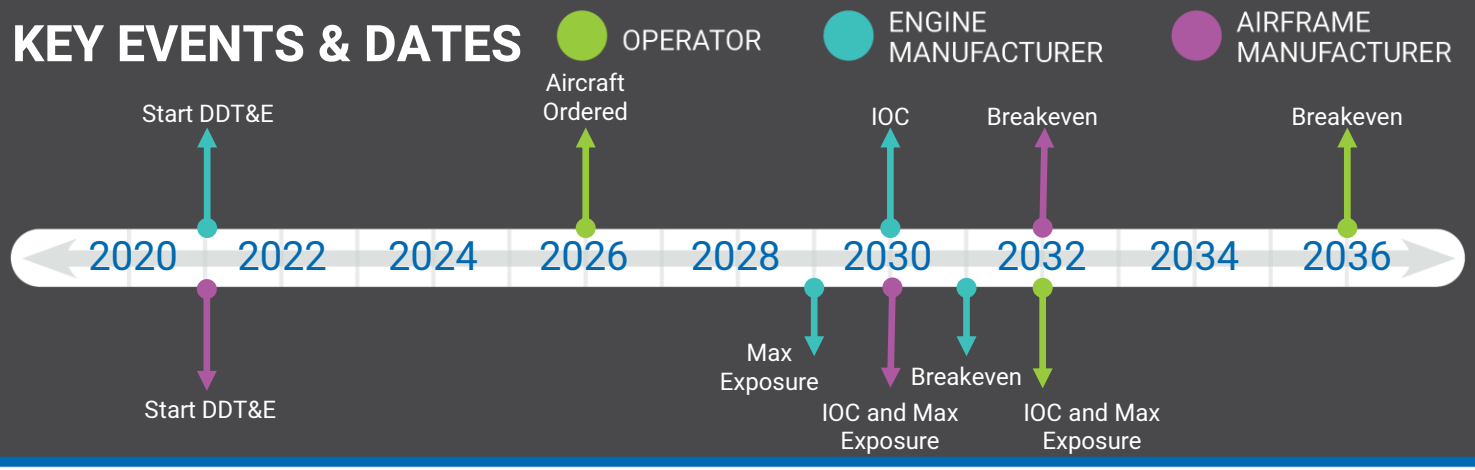

Business Results

OPERATOR

9%
ROIC (avg)

$849M
NPV

$4.3B
Max Exposure

ENGINE MANUFACTURER

22%
IRR

$835M
NPV

$2.0B
Max Exposure

AIRFRAME MANUFACTURER

22%
IRR

$3.1B
NPV

$6.9B
Max Exposure

BUSINESS CASE ANALYSIS

This aircraft is capturing 19 of 37 addressable routes that are within its design range which are exclusively Atlantic Ocean routes.

NASA SBIR Contract #80NSSC22C0008

SAF Matrix – Aircraft 7

ID: SAF.M2.P50.R4000.20230518

Mach 2
Cruise Speed

4,000 nmi
Max Range

50
Passenger Count

SAF
Fuel Type

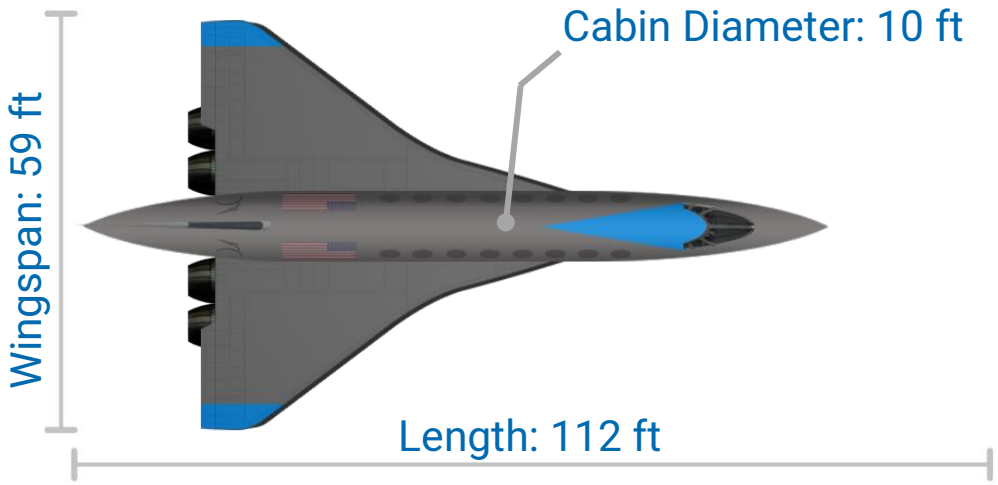

COST METRICS (FY21 USD)

DDT&E

$6.9B Airframe

$2.6B Engine

TFU

$94M Airframe

$11M Engine

ENVIRONMENTAL METRICS

91 EPNdB
Lateral Takeoff Noise

104 PNLdB
Sonic Boom

0.32 kg/km/pax
Emissions (CO_2e)

0.1 kg/km/pax
Fuel Consumption Rate

163,000 lbm
MTOW

68,000 lbm
MEW

4 x 15,300 lbf
Engine Thrust SLS

4.4 hours
Gate-to-Gate Time
at Max Range

56,300 ft
Cruise Altitude

6,600 ft
Bal. Field Length SL

AIRCRAFT NOTES

- Supersonic cruise condition L/D = 8
- Supersonic cruise condition Isp = 3060 s
- Vehicle propellant mass fraction (PMF) = 0.47
- Takeoff T/W = 0.375
- Effective Dose Rate (51° Lat.) = 9.0 μSv/hr

NASA SBIR Contract #80NSSC22C0008

SAF Matrix – Aircraft 7

SpaceWorks

NASA

ID: SAF.M2.P50.R4000.20230518

Key Inputs

Mach 2
Cruise Speed

4,000 nmi
Range

50
Passenger Count

SAF
Fuel Type

OPERATOR METRICS

$4,500-$5,100
Ticket Price

0.8M
Pax/Year

20
Routes Captured

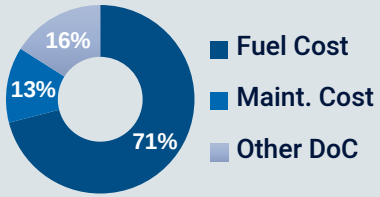

MANUFACTURER METRICS

$489M
Aircraft Price

$375M
Airframe Price

$29M x4
Engine Price

150
Aircraft Sold

KEY EVENTS & DATES

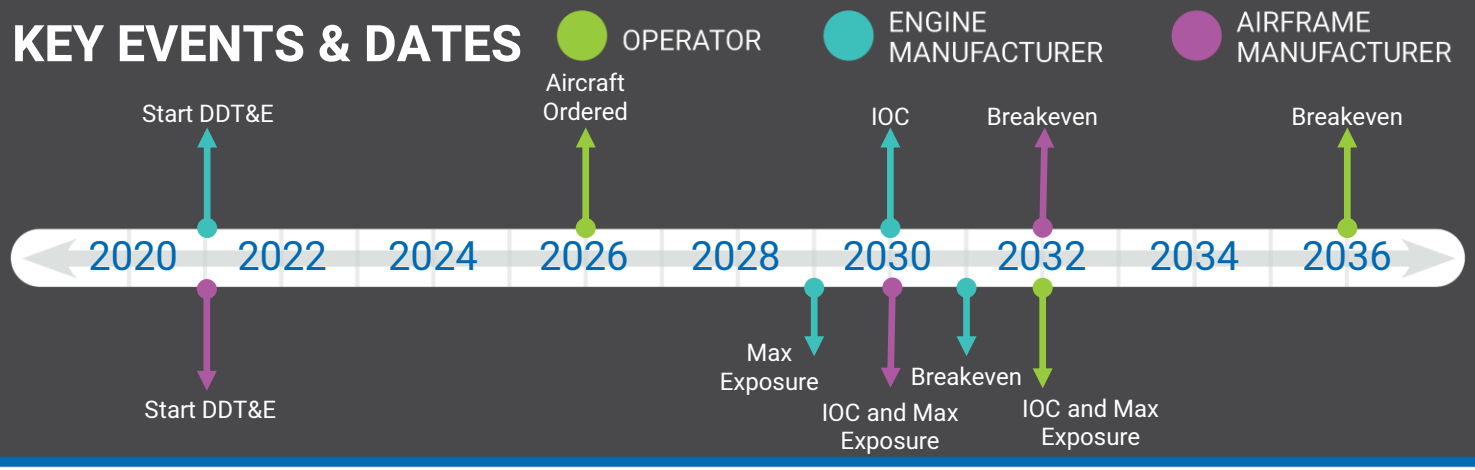

Business Results

OPERATOR

9%
ROIC (avg)

$770M
NPV

$4.5B
Max Exposure

ENGINE MANUFACTURER

21%
IRR

$785M
NPV

$2.4B
Max Exposure

AIRFRAME MANUFACTURER

21%
IRR

$2.7B
NPV

$7.8B
Max Exposure

BUSINESS CASE ANALYSIS

This aircraft is capturing 20 of 37 addressable routes that are within its design range which are exclusively Atlantic Ocean routes.

NASA SBIR Contract #80NSSC22C0008

SAF Matrix – Aircraft 8

ID: SAF.M3.P50.R4000.20230518

Mach 3
Cruise Speed

4,000 nmi
Max Range

50
Passenger Count

SAF
Fuel Type

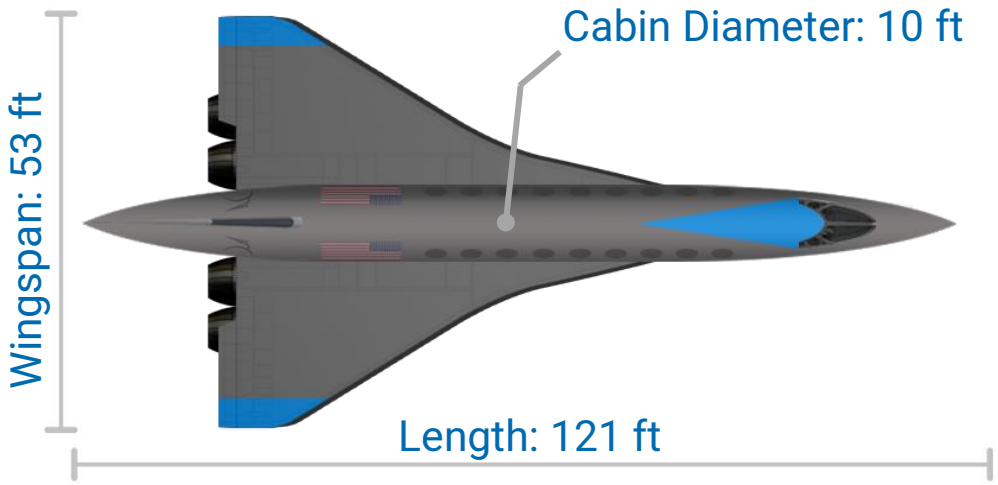

COST METRICS (FY21 USD)

DDT&E

$8.3B Airframe

$3.6B Engine

TFU

$118M Airframe

$21M Engine

ENVIRONMENTAL METRICS

93 EPNdB
Lateral Takeoff Noise

103 PNLdB
Sonic Boom

0.5 kg/km/pax
Emissions (CO_2e)

0.16 kg/km/pax
Fuel Consumption Rate

227,000 lbm
MTOW

85,700 lbm
MEW

4 x 21,300 lbf
Engine Thrust SLS

3.1 hours
Gate-to-Gate Time
at Max Range

73,300 ft
Cruise Altitude

7,800 ft
Bal. Field Length SL

AIRCRAFT NOTES

- Supersonic cruise condition L/D = 6.4
- Supersonic cruise condition Isp = 2040 s
- Vehicle propellant mass fraction (PMF) = 0.47
- Takeoff T/W = 0.375
- Effective Dose Rate (51° Lat.) = 9.1 μSv/hr

NASA SBIR Contract #80NSSC22C0008

SAF Matrix – Aircraft 8

SpaceWorks

NASA

ID: SAF.M3.P50.R4000.20230518

Key Inputs

Mach 3
Cruise Speed

4,000 nmi
Range

50
Passenger Count

SAF
Fuel Type

OPERATOR METRICS

$8,800-$9,900
Ticket Price

0.2M
Pax/Year

9
Routes Captured

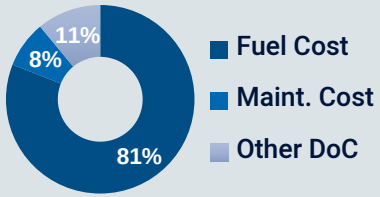

MANUFACTURER METRICS

$863M
Aircraft Price

$606M
Airframe Price

$64M x4
Engine Price

55
Aircraft Sold

KEY EVENTS & DATES

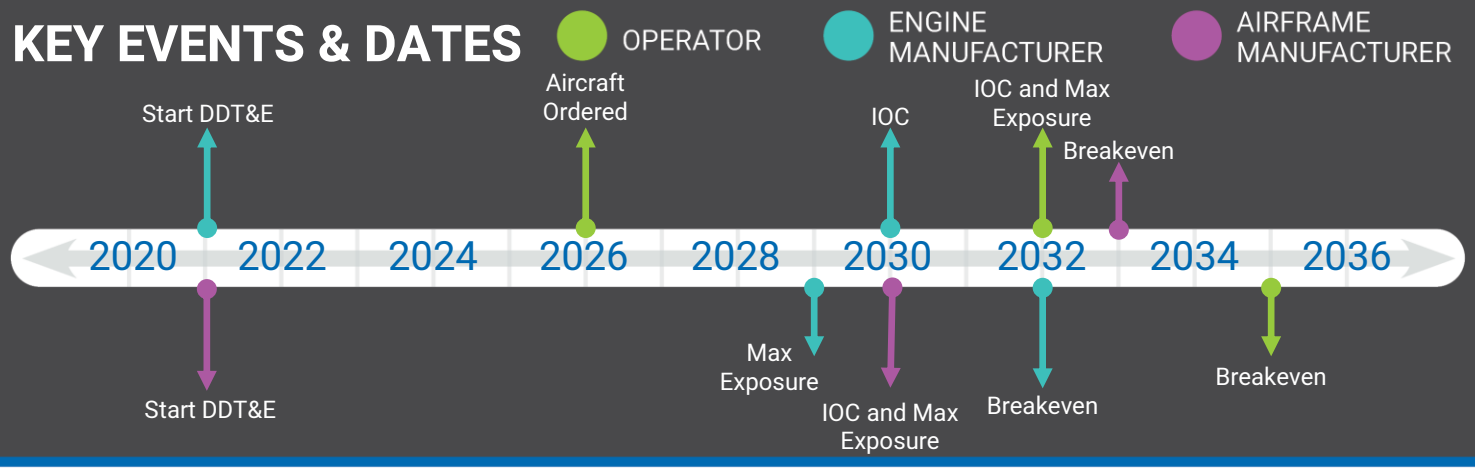

Business Results

OPERATOR

7%
ROIC (avg)

$586M
NPV

$2.3B
Max Exposure

ENGINE MANUFACTURER

18%
IRR

$568M
NPV

$3.9B
Max Exposure

AIRFRAME MANUFACTURER

18%
IRR

$1.6B
NPV

$11B
Max Exposure

BUSINESS CASE ANALYSIS

This aircraft is capturing 9 of 37 addressable routes that are within its design range which are exclusively Atlantic Ocean routes.

NASA SBIR Contract #80NSSC22C0008

SAF Matrix – Aircraft 9

ID: SAF.M4.P50.R4000.20230518

Mach 4
Cruise Speed

4,000 nmi
Max Range

50
Passenger Count

SAF
Fuel Type

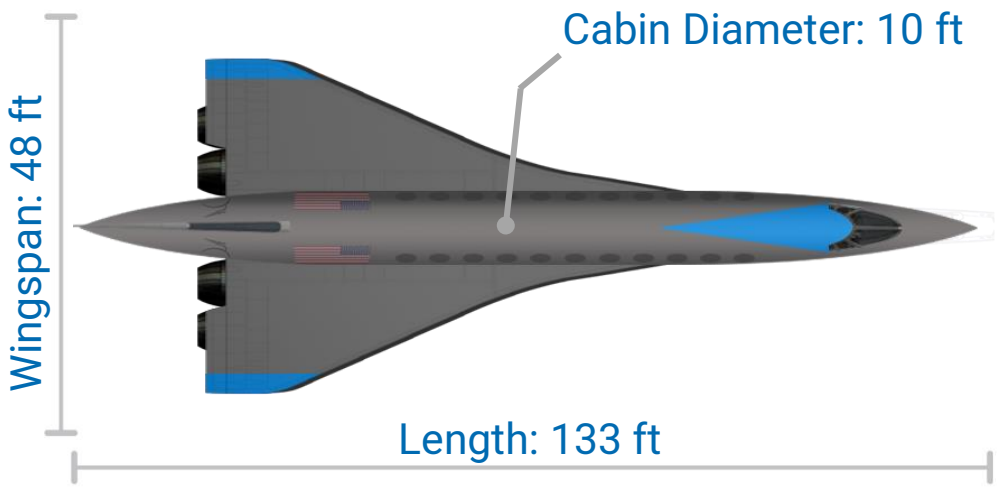

COST METRICS (FY21 USD)

DDT&E

$9.1B Airframe

$4.5B Engine

TFU

$134M Airframe

$32M Engine

ENVIRONMENTAL METRICS

93 EPNdB
Lateral Takeoff Noise

103 PNLdB
Sonic Boom

0.6 kg/km/pax
Emissions (CO_2e)

0.18 kg/km/pax
Fuel Consumption Rate

265,000 lbm
MTOW

99,200 lbm
MEW

4 x 24,800 lbf
Engine Thrust SLS

2.5 hours
Gate-to-Gate Time
at Max Range

85,500 ft
Cruise Altitude

9,100 ft
Bal. Field Length SL

AIRCRAFT NOTES

- Supersonic cruise condition L/D = 5.6
- Supersonic cruise condition Isp = 1631 s
- Vehicle propellant mass fraction (PMF) = 0.47
- Takeoff T/W = 0.375
- Effective Dose Rate (51° Lat.) = 8.5 μSv/hr

NASA SBIR Contract #80NSSC22C0008

SAF Matrix – Aircraft 9

ID: SAF.M4.P50.R4000.20230518

Key Inputs

Mach 4
Cruise Speed

4,000 nmi
Range

50
Passenger Count

SAF
Fuel Type

OPERATOR METRICS

$9,400-$10,500
Ticket Price

0.2M
Pax/Year

9
Routes Captured

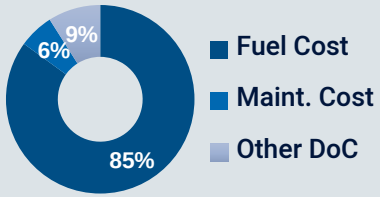

MANUFACTURER METRICS

$892M
Aircraft Price

$586M
Airframe Price

$77M x4
Engine Price

55
Aircraft Sold

KEY EVENTS & DATES

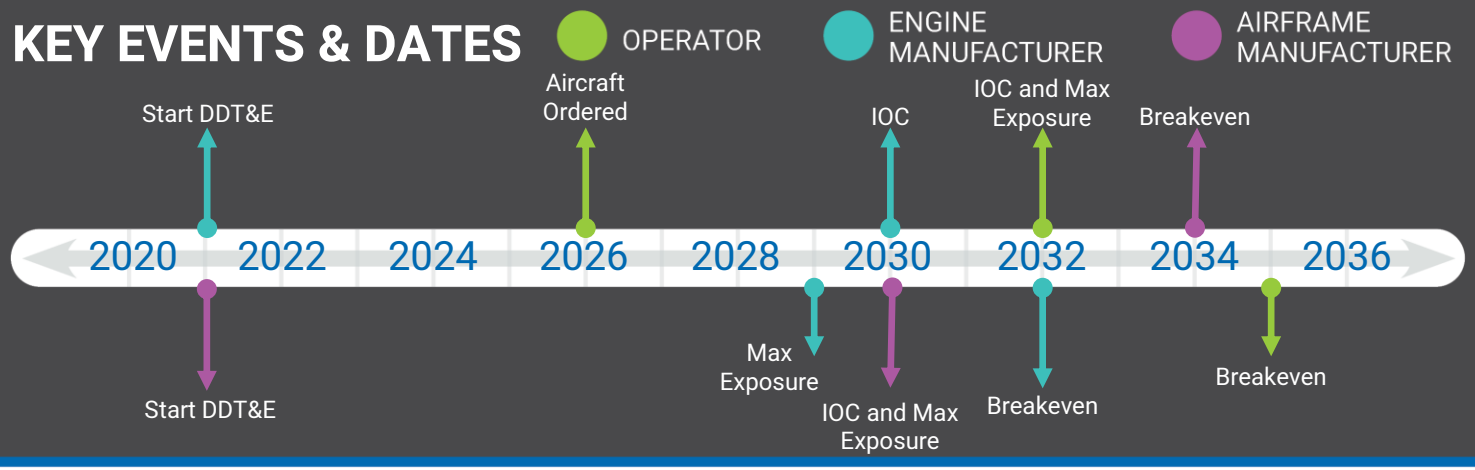

Business Results

OPERATOR

7%
ROIC (avg)

$582M
NPV

$2.5B
Max Exposure

ENGINE MANUFACTURER

16%
IRR

$380M
NPV

$4.9B
Max Exposure

AIRFRAME MANUFACTURER

16%
IRR

$946M
NPV

$12B
Max Exposure

BUSINESS CASE ANALYSIS

This aircraft is capturing 9 of 37 addressable routes that are within its design range which are exclusively Atlantic Ocean routes.

NASA SBIR Contract #80NSSC22C0008

SAF Matrix – Aircraft 10

ID: SAF.M5.P50.R4000.20230518

Mach 5
Cruise Speed

4,000 nmi
Max Range

50
Passenger Count

SAF
Fuel Type

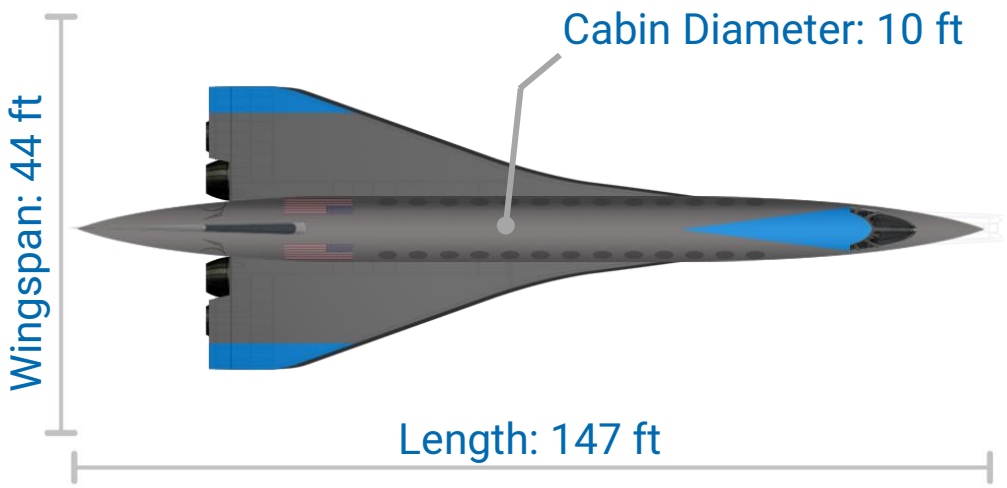

COST METRICS (FY21 USD)

DDT&E

$10.0B Airframe

$5.5B Engine

TFU

$150M Airframe

$46M Engine

ENVIRONMENTAL METRICS

94 EPNdB
Lateral Takeoff Noise

102 PNLdB
Sonic Boom

0.67 kg/km/pax
Emissions (CO2e)

0.21 kg/km/pax
Fuel Consumption Rate

299,000 lbm
MTOW

114,000 lbm
MEW

4 x 28,100 lbf
Engine Thrust SLS

2.1 hours
Gate-to-Gate Time
at Max Range

95,100 ft
Cruise Altitude

10,400 ft
Bal. Field Length SL

AIRCRAFT NOTES

- Supersonic cruise condition L/D = 5.1
- Supersonic cruise condition Isp = 1325 s
- Vehicle propellant mass fraction (PMF) = 0.47
- Takeoff T/W = 0.375
- Effective Dose Rate (51º Lat.) = 8.1 μSv/hr

NASA SBIR Contract #80NSSC22C0008

SAF Matrix – Aircraft 10

ID: SAF.M5.P50.R4000.20230518

Key Inputs

Mach 5
Cruise Speed

4,000 nmi
Range

50
Passenger Count

SAF
Fuel Type

OPERATOR METRICS

$10,200-$11,500
Ticket Price

0.2M
Pax/Year

9
Routes Captured

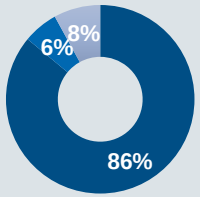

MANUFACTURER METRICS

$927M
Aircraft Price

$567M
Airframe Price

$90M x4
Engine Price

55
Aircraft Sold

KEY EVENTS & DATES

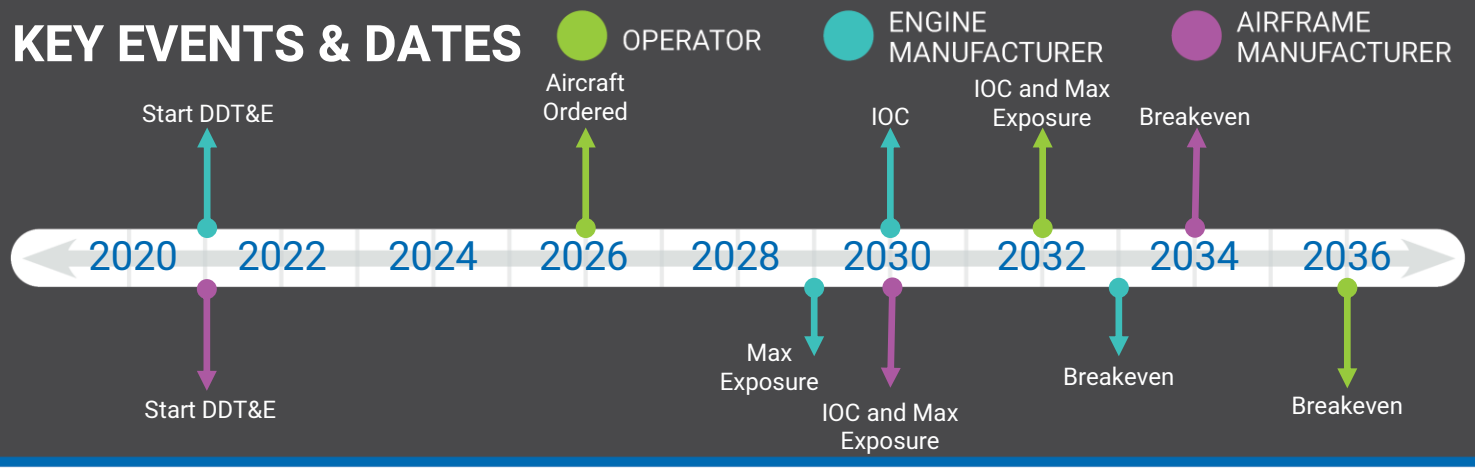

Business Results

OPERATOR

6%
ROIC (avg)

$589M
NPV

$2.6B
Max Exposure

ENGINE MANUFACTURER

15%
IRR

$151M
NPV

$6.0B
Max Exposure

AIRFRAME MANUFACTURER

15%
IRR

$342M
NPV

$14B
Max Exposure

BUSINESS CASE ANALYSIS

This aircraft is capturing 9 of 37 addressable routes that are within its design range which are exclusively Atlantic Ocean routes.

NASA SBIR Contract #80NSSC22C0008

SAF Matrix – Aircraft 11

ID: SAF.M1.5.P20.R6510.20230518

Mach 1.5
Cruise Speed

6,510 nmi
Max Range

20
Passenger Count

SAF
Fuel Type

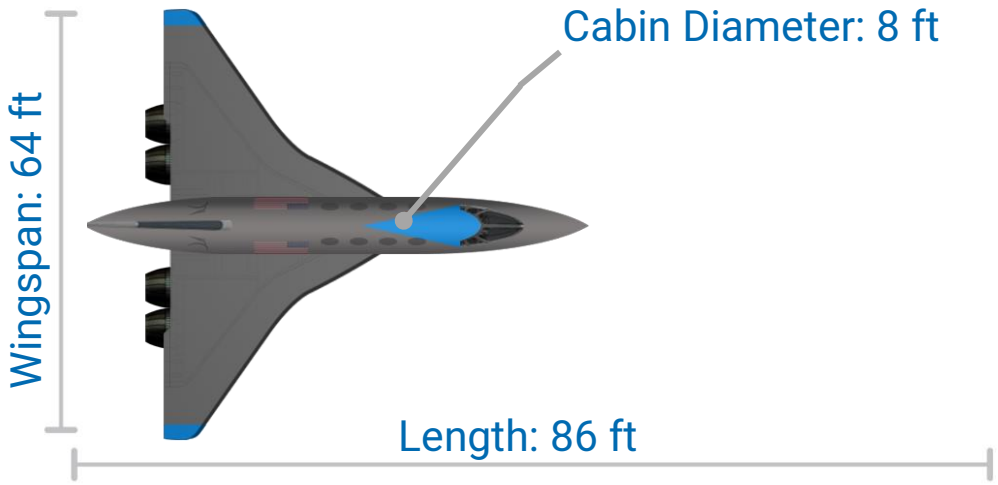

COST METRICS (FY21 USD)

DDT&E

$5.8B Airframe

$2.1B Engine

TFU

$75M Airframe

$7.9M Engine

ENVIRONMENTAL METRICS

91 EPNdB
Lateral Takeoff Noise

104 PNLdB
Sonic Boom

0.47 kg/km/pax
Emissions (CO2e)

0.15 kg/km/pax
Fuel Consumption Rate

135,000 lbm
MTOW

50,000 lbm
MEW

4 x 12,600 lbf
Engine Thrust SLS

8.4 hours
Gate-to-Gate Time
at Max Range

44,400 ft
Cruise Altitude

6,000 ft
Bal. Field Length SL

AIRCRAFT NOTES

- Supersonic cruise condition L/D = 9.6
- Supersonic cruise condition Isp = 4070 s
- Vehicle propellant mass fraction (PMF) = 0.47
- Takeoff T/W = 0.375
- Effective Dose Rate (51º Lat.) = 6.4 µSv/hr

NASA SBIR Contract #80NSSC22C0008

SAF Matrix – Aircraft 11

SpaceWorks

NASA

ID: SAF.M1.5.P20.R6510.20230518

Key Inputs

Mach 1.5
Cruise Speed

6,510 nmi
Range

20
Passenger Count

SAF
Fuel Type

OPERATOR METRICS

$7,000-$9,300
Ticket Price

0.9M
Pax/Year

54
Routes Captured

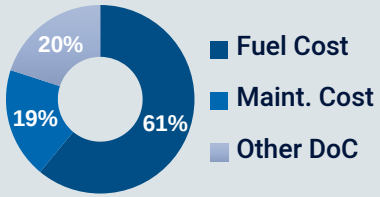

MANUFACTURER METRICS

$232M
Aircraft Price

$185M
Airframe Price

$12M x4
Engine Price

569
Aircraft Sold

KEY EVENTS & DATES

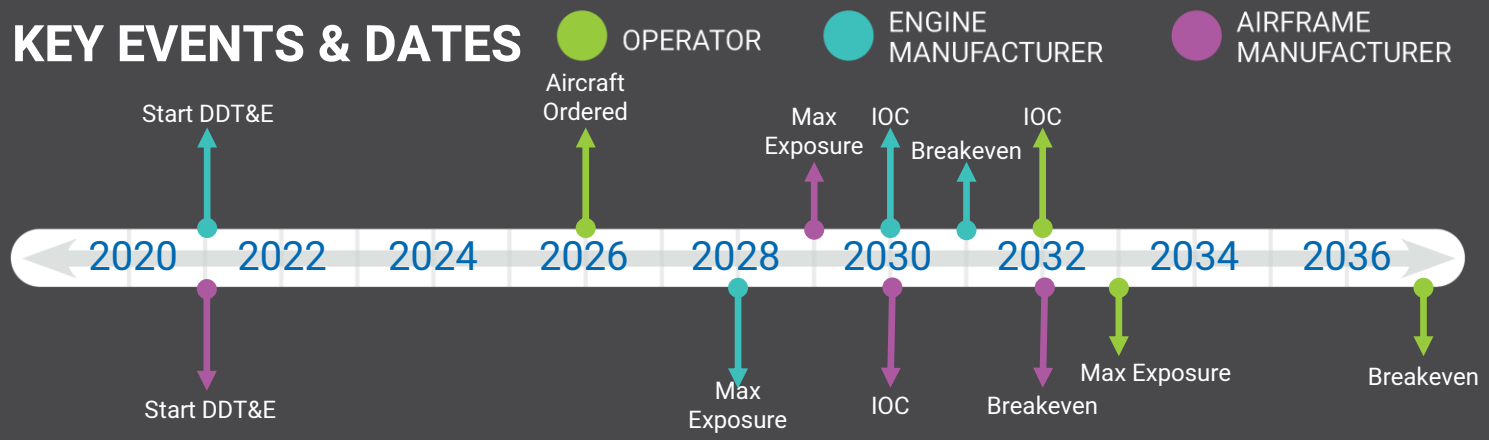

Business Results

OPERATOR

9%
ROIC (avg)

$1.7B
NPV

$6.7B
Max Exposure

ENGINE MANUFACTURER

23%
IRR

$841M
NPV

$1.5B
Max Exposure

AIRFRAME MANUFACTURER

23%
IRR

$3.3B
NPV

$5.9B
Max Exposure

BUSINESS CASE ANALYSIS

This aircraft is capturing 54 of 84 addressable routes that are within its design range which are a mix of Atlantic & Pacific Ocean routes.

NASA SBIR Contract #80NSSC22C0008

SAF Matrix – Aircraft 12

ID: SAF.M2.P20.R6100.20230518

Mach 2
Cruise Speed

6,100 nmi
Max Range

20
Passenger Count

SAF
Fuel Type

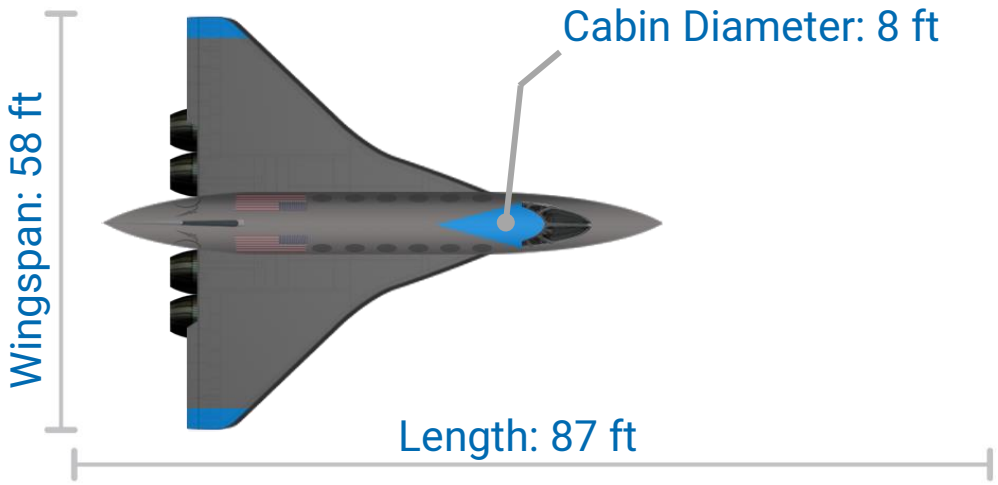

COST METRICS (FY21 USD)

DDT&E

$6.5B Airframe

$2.6B Engine

TFU

$88M Airframe

$12M Engine

ENVIRONMENTAL METRICS

91 EPNdB
Lateral Takeoff Noise

104 PNLdB
Sonic Boom

0.68 kg/km/pax
Emissions (CO_2e)

0.21 kg/km/pax
Fuel Consumption Rate

170,000 lbm
MTOW

58,300 lbm
MEW

4 x 16,000 lbf
Engine Thrust SLS

6.2 hours
Gate-to-Gate Time
at Max Range

56,300 ft
Cruise Altitude

6,600 ft
Bal. Field Length SL

AIRCRAFT NOTES

- Supersonic cruise condition L/D = 8
- Supersonic cruise condition Isp = 3060 s
- Vehicle propellant mass fraction (PMF) = 0.47
- Takeoff T/W = 0.375
- Effective Dose Rate (51° Lat.) = 9.0 μSv/hr

NASA SBIR Contract #80NSSC22C0008

SAF Matrix – Aircraft 12

SpaceWorks

NASA

ID: SAF.M2.P20.R6100.20230518

Key Inputs

Mach 2
Cruise Speed

6,100 nmi
Range

20
Passenger Count

SAF
Fuel Type

OPERATOR METRICS

$8,800-$11,500
Ticket Price

0.6M
Pax/Year

44
Routes Captured

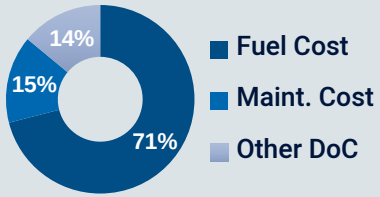

MANUFACTURER METRICS

$323M
Aircraft Price

$245M
Airframe Price

$19M x4
Engine Price

286
Aircraft Sold

KEY EVENTS & DATES

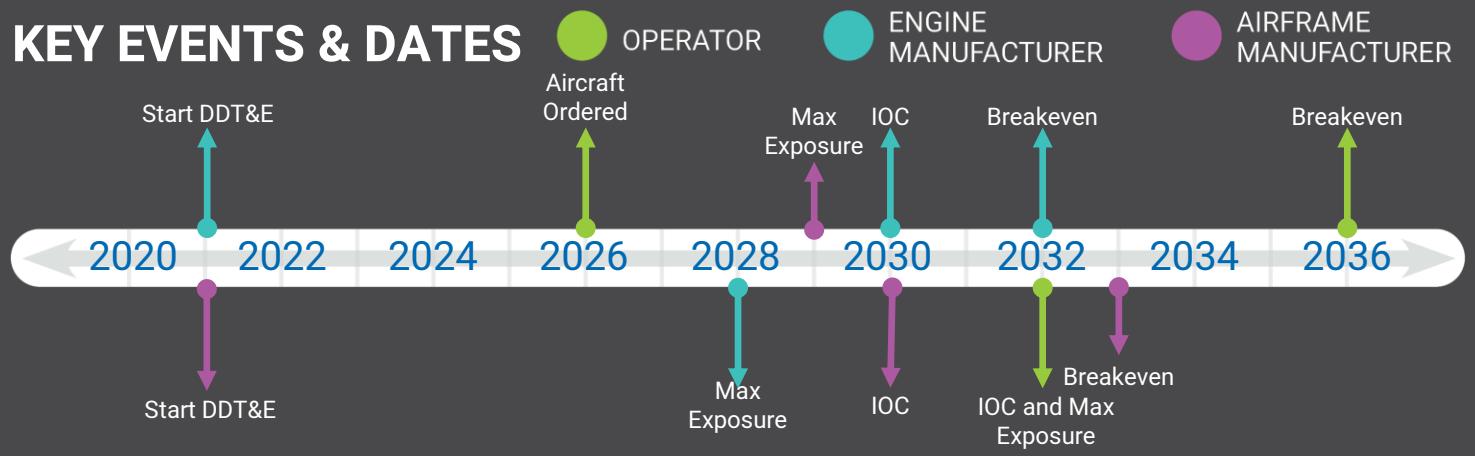

Business Results

OPERATOR

8%
ROIC (avg)

$1.5B
NPV

$5.5B
Max Exposure

ENGINE MANUFACTURER

20%
IRR

$675M
NPV

$2.2B
Max Exposure

AIRFRAME MANUFACTURER

20%
IRR

$2.3B
NPV

$7.2B
Max Exposure

BUSINESS CASE ANALYSIS

This aircraft is capturing 44 of 80 addressable routes that are within its design range which are a mix of Atlantic & Pacific Ocean routes.

NASA SBIR Contract #80NSSC22C0008

SAF Matrix – Aircraft 13

ID: SAF.M3.P20.R5700.20230518

Mach 3
Cruise Speed

5,700 nmi
Max Range

20
Passenger Count

SAF
Fuel Type

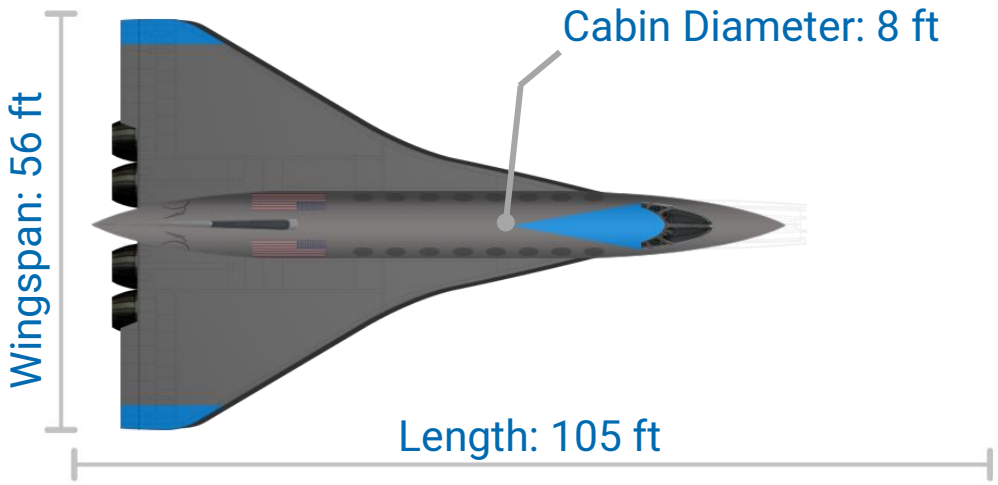

COST METRICS (FY21 USD)

DDT&E

$9.0B Airframe

$4.0B Engine

TFU

$131M Airframe

$27M Engine

ENVIRONMENTAL METRICS

94 EPNdB
Lateral Takeoff Noise

103 PNLdB
Sonic Boom

1.34 kg/km/pax
Emissions (CO2e)

0.42 kg/km/pax
Fuel Consumption Rate

292,000 lbm
MTOW

90,300 lbm
MEW

4 x 27,300 lbf
Engine Thrust SLS

4.1 hours
Gate-to-Gate Time
at Max Range

73,300 ft
Cruise Altitude

7,800 ft
Bal. Field Length SL

AIRCRAFT NOTES

- Supersonic cruise condition L/D = 6.4
- Supersonic cruise condition Isp = 2040 s
- Vehicle propellant mass fraction (PMF) = 0.47
- Takeoff T/W = 0.375
- Effective Dose Rate (51º Lat.) = 9.1 μSv/hr

NASA SBIR Contract #80NSSC22C0008

SAF Matrix – Aircraft 13

SpaceWorks

NASA

ID: SAF.M3.P20.R5700.20230518

Key Inputs

Mach 3
Cruise Speed

5,700 nmi
Range

20
Passenger Count

SAF
Fuel Type

OPERATOR METRICS

$11,800-$15,100
Ticket Price

0.3M
Pax/Year

28
Routes Captured

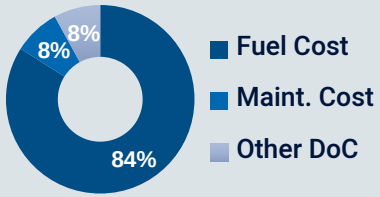

MANUFACTURER METRICS

$389M
Aircraft Price

$261M
Airframe Price

$32M x4
Engine Price

145
Aircraft Sold

KEY EVENTS & DATES

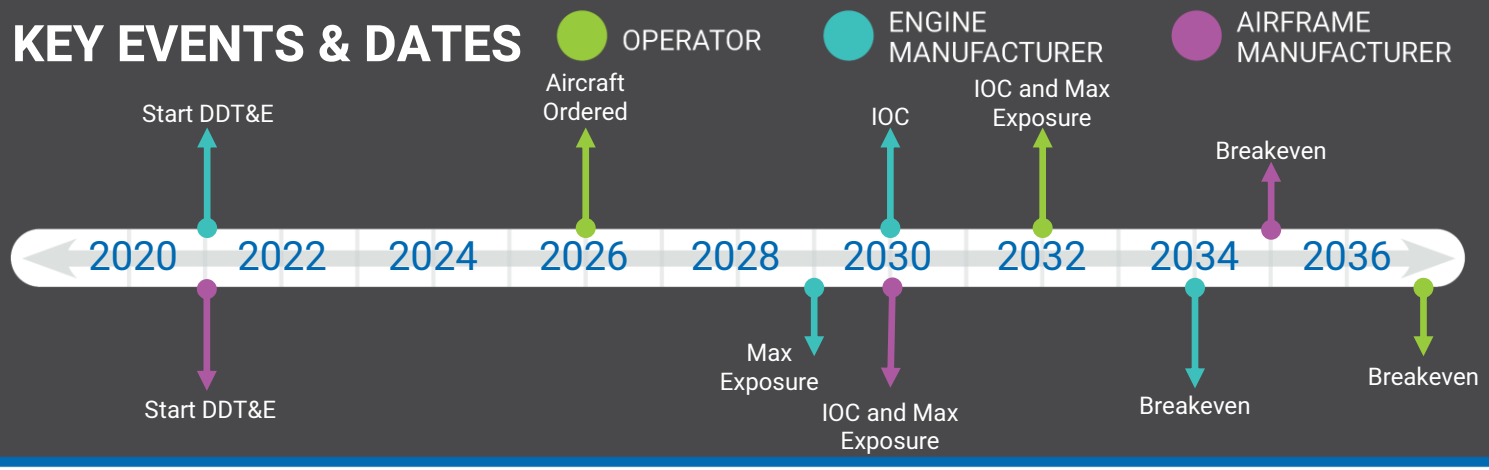

Business Results

OPERATOR

5%
ROIC (avg)

$516M
NPV

$3.6B
Max Exposure

ENGINE MANUFACTURER

12%
IRR

$-371M
NPV

$4.0B
Max Exposure

AIRFRAME MANUFACTURER

12%
IRR

$-1.0B
NPV

$11B
Max Exposure

BUSINESS CASE ANALYSIS

This aircraft is capturing 28 of 78 addressable routes that are within its design range which are a mix of Atlantic & Pacific Ocean routes.

NASA SBIR Contract #80NSSC22C0008

SAF Matrix – Aircraft 14

ID: SAF.M4.P20.R5400.20230518

Mach 4
Cruise Speed

5,400 nmi
Max Range

20
Passenger Count

SAF
Fuel Type

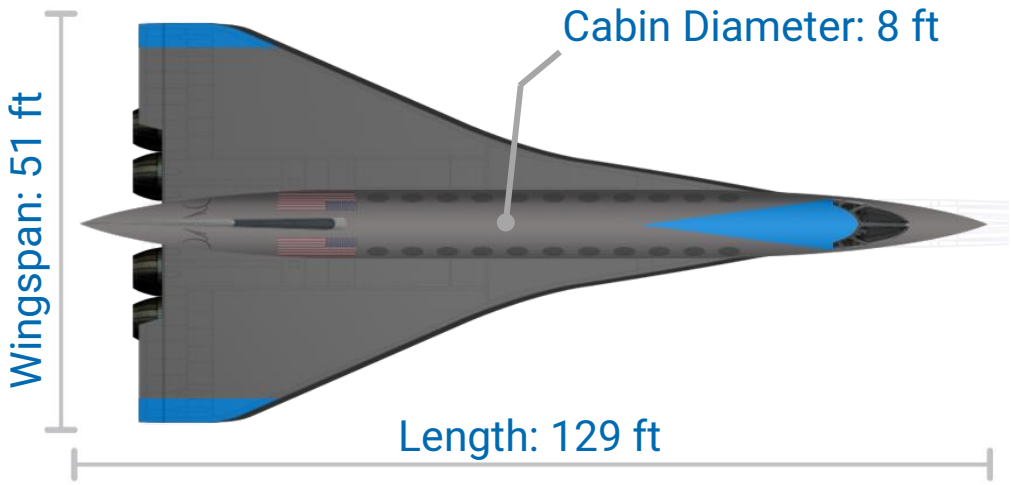

COST METRICS (FY21 USD)

DDT&E

$10B Airframe

$5.0B Engine

TFU

$153M Airframe

$42M Engine

ENVIRONMENTAL METRICS

95 EPNdB
Lateral Takeoff Noise

103 PNLdB
Sonic Boom

1.68 kg/km/pax
Emissions (CO2e)

0.52 kg/km/pax
Fuel Consumption Rate

347,000 lbm
MTOW

109,700 lbm
MEW

4 x 32,500 lbf
Engine Thrust SLS

3.1 hours
Gate-to-Gate Time
at Max Range

85,500 ft
Cruise Altitude

9,100 ft
Bal. Field Length SL

AIRCRAFT NOTES

- Supersonic cruise condition L/D = 5.6
- Supersonic cruise condition Isp = 1631 s
- Vehicle propellant mass fraction (PMF) = 0.47
- Takeoff T/W = 0.375
- Effective Dose Rate (51º Lat.) = 8.5 μSv/hr

NASA SBIR Contract #80NSSC22C0008

SAF Matrix – Aircraft 14

ID: SAF.M4.P20.R5400.20230518

Key Inputs

Mach 4
Cruise Speed

5,400 nmi
Range

20
Passenger Count

SAF
Fuel Type

OPERATOR METRICS

$15,300-$19,200
Ticket Price

0.2M
Pax/Year

17
Routes Captured

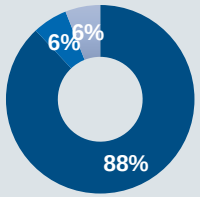

MANUFACTURER METRICS

$559M
Aircraft Price

$346M
Airframe Price

$53M x4
Engine Price

78
Aircraft Sold

KEY EVENTS & DATES

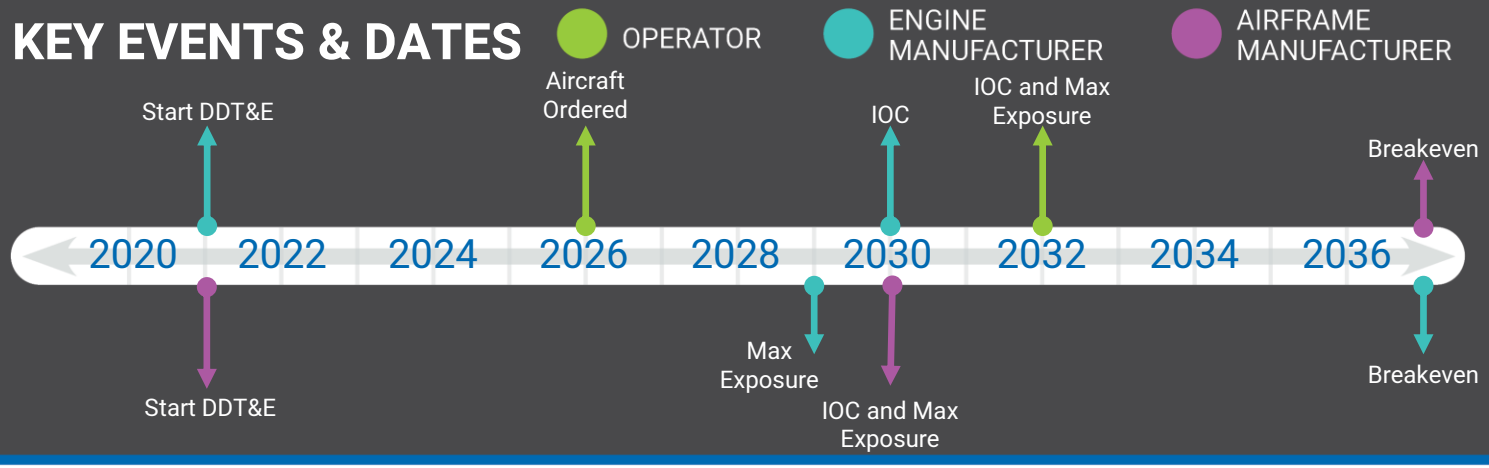

Business Results

OPERATOR

4%
ROIC (avg)

$188M
NPV

$2.5B
Max Exposure

ENGINE MANUFACTURER

9%
IRR

$-1.1B
NPV

$5.4B
Max Exposure

AIRFRAME MANUFACTURER

9%
IRR

$-2.7B
NPV

$14B
Max Exposure

BUSINESS CASE ANALYSIS

This aircraft is capturing 17 of 72 addressable routes that are within its design range which are a mix of Atlantic & Pacific Ocean routes.

NASA SBIR Contract #80NSSC22C0008

SAF Matrix – Aircraft 15

ID: SAF.M5.P20.R5000.20230518

Mach 5
Cruise Speed

5,000 nmi
Max Range

20
Passenger Count

SAF
Fuel Type

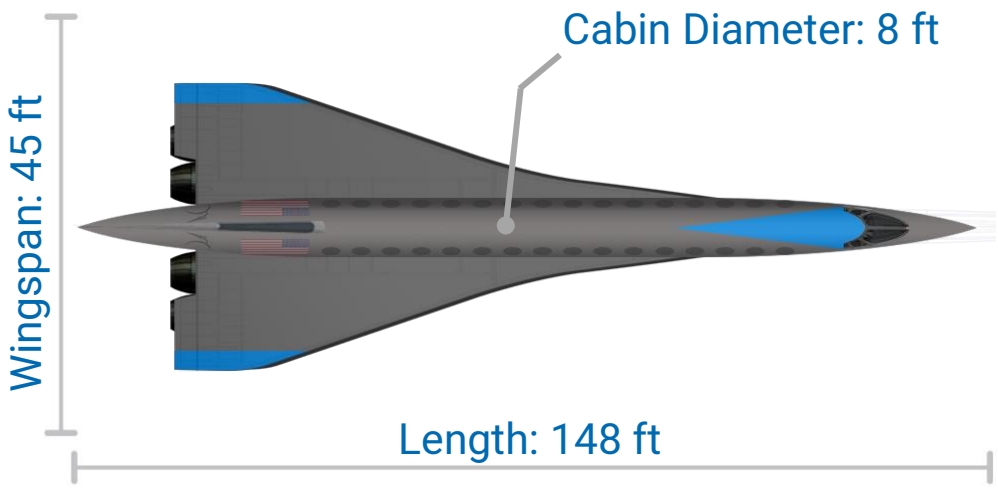

COST METRICS (FY21 USD)

DDT&E

$11B Airframe

$5.8B Engine

TFU

$159M Airframe

$53M Engine

ENVIRONMENTAL METRICS

95 EPNdB
Lateral Takeoff Noise

102 PNLdB
Sonic Boom

1.77 kg/km/pax
Emissions (CO2e)

0.55 kg/km/pax
Fuel Consumption Rate

349,000 lbm
MTOW

117,100 lbm
MEW

4 x 32,700 lbf
Engine Thrust SLS

2.4 hours
Gate-to-Gate Time
at Max Range

95,100 ft
Cruise Altitude

10,400 ft
Bal. Field Length SL

AIRCRAFT NOTES

- Supersonic cruise condition L/D = 5.1
- Supersonic cruise condition Isp = 1325 s
- Vehicle propellant mass fraction (PMF) = 0.47
- Takeoff T/W = 0.375
- Effective Dose Rate (51º Lat.) = 8.1 μSv/hr

NASA SBIR Contract #80NSSC22C0008

SAF Matrix – Aircraft 15

ID: SAF.M5.P20.R5000.20230518

Key Inputs

Mach 5
Cruise Speed

5,000 nmi
Range

20
Passenger Count

SAF
Fuel Type

OPERATOR METRICS

$20,000-$24,400
Ticket Price

0.1M
Pax/Year

8
Routes Captured

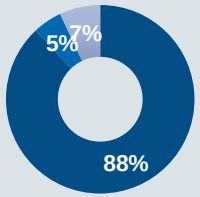

MANUFACTURER METRICS

$631M
Aircraft Price

$344M
Airframe Price

$72M x4
Engine Price

46
Aircraft Sold

KEY EVENTS & DATES

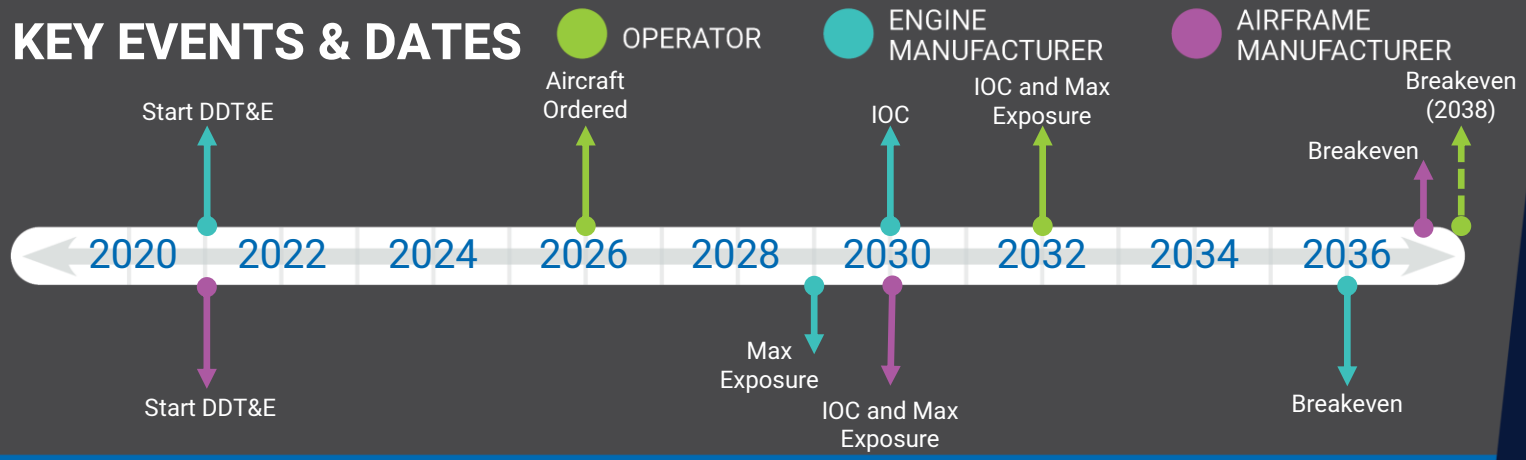

Business Results

OPERATOR

4%
ROIC (avg)

$96M
NPV

$1.5B
Max Exposure

ENGINE MANUFACTURER

9%
IRR

$-1.2B
NPV

$6.6B
Max Exposure

AIRFRAME MANUFACTURER

9%
IRR

$-2.6B
NPV

$15B
Max Exposure

BUSINESS CASE ANALYSIS

This aircraft is capturing 8 of 66 addressable routes that are within its design range which are a mix of Atlantic & Pacific Ocean routes.

NASA SBIR Contract #80NSSC22C0008

SAF Matrix – Aircraft 16

ID: SAF.M1.5.P50.R6510.20230518

Mach 1.5
Cruise Speed

6,510 nmi
Max Range

50
Passenger Count

SAF
Fuel Type

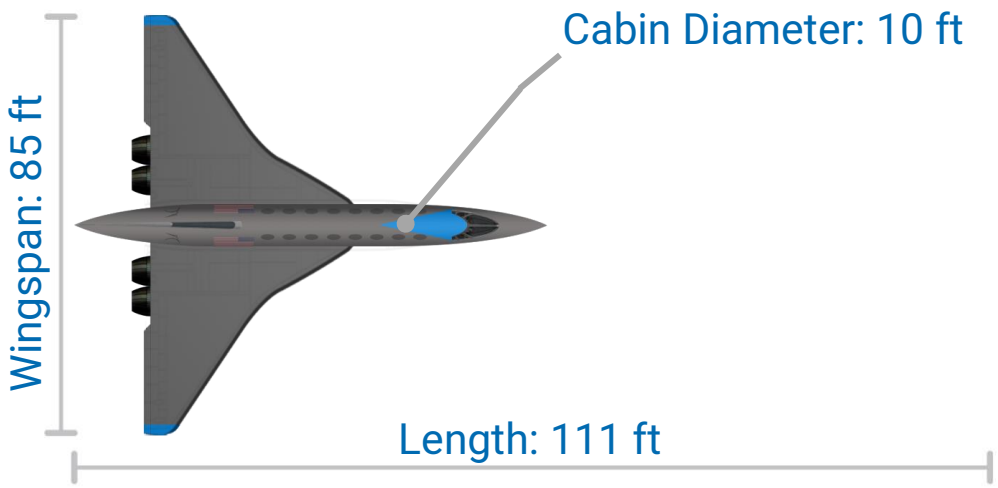

COST METRICS (FY21 USD)

DDT&E

$8.3B Airframe

$2.7B Engine

TFU

$117M Airframe

$14M Engine

ENVIRONMENTAL METRICS

93 EPNdB
Lateral Takeoff Noise

106 PNLdB
Sonic Boom

0.33 kg/km/pax
Emissions (CO2e)

0.1 kg/km/pax
Fuel Consumption Rate

237,000 lbm
MTOW

85,400 lbm
MEW

4 x 22,200 lbf
Engine Thrust SLS

8.4 hours
Gate-to-Gate Time
at Max Range

44,400 ft
Cruise Altitude

6,000 ft
Bal. Field Length SL

AIRCRAFT NOTES

- Supersonic cruise condition L/D = 9.6
- Supersonic cruise condition Isp = 4070 s
- Vehicle propellant mass fraction (PMF) = 0.47
- Takeoff T/W = 0.375
- Effective Dose Rate (51º Lat.) = 6.4 µSv/hr

NASA SBIR Contract #80NSSC22C0008

SAF Matrix – Aircraft 16

ID: SAF.M1.5.P50.R6510.20230518

Key Inputs

Mach 1.5
Cruise Speed

6,510 nmi
Range

50
Passenger Count

SAF
Fuel Type

OPERATOR METRICS

$7,200-$9,700
Ticket Price

0.6M
Pax/Year

27
Routes Captured

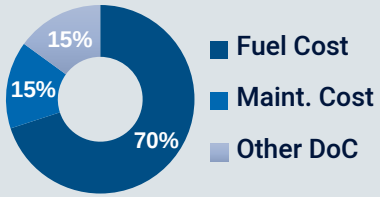

MANUFACTURER METRICS

$591M
Aircraft Price

$467M
Airframe Price

$31M x4
Engine Price

171
Aircraft Sold

KEY EVENTS & DATES

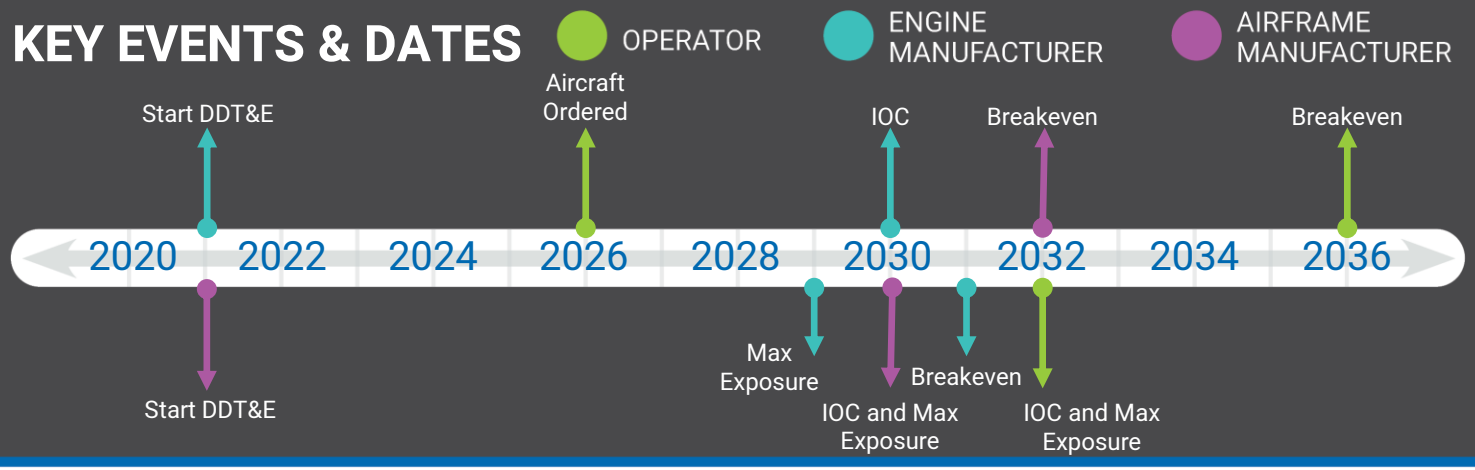

Business Results

OPERATOR

9%
ROIC (avg)

$1.3B
NPV

$6.1B
Max Exposure

ENGINE MANUFACTURER

23%
IRR

$1.1B
NPV

$2.3B
Max Exposure

AIRFRAME MANUFACTURER

23%
IRR

$4.4B
NPV

$8.8B
Max Exposure

BUSINESS CASE ANALYSIS

This aircraft is capturing 27 of 84 addressable routes that are within its design range which are a mix of Atlantic & Pacific Ocean routes.

NASA SBIR Contract #80NSSC22C0008

SAF Matrix – Aircraft 17

ID: SAF.M2.P50.R6100.20230518

Mach 2
Cruise Speed

6,100 nmi
Max Range

50
Passenger Count

SAF
Fuel Type

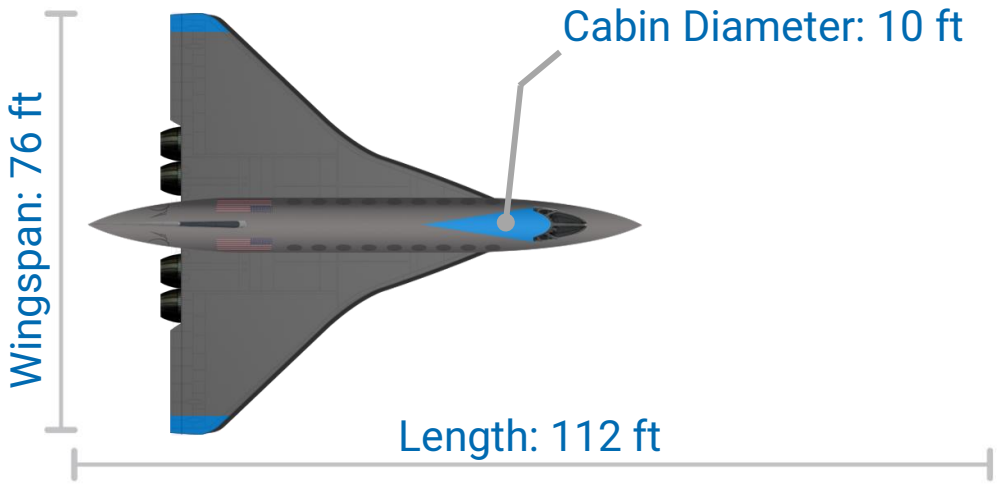

COST METRICS (FY21 USD)

DDT&E

$9.5B Airframe

$3.3B Engine

TFU

$138M Airframe

$21M Engine

ENVIRONMENTAL METRICS

94 EPNdB
Lateral Takeoff Noise

106 PNLdB
Sonic Boom

0.48 kg/km/pax
Emissions (CO2e)

0.15 kg/km/pax
Fuel Consumption Rate

299,000 lbm
MTOW

100,200 lbm
MEW

4 x 28,100 lbf
Engine Thrust SLS

6.2 hours
Gate-to-Gate Time
at Max Range

56,300 ft
Cruise Altitude

6,600 ft
Bal. Field Length SL

AIRCRAFT NOTES

- Supersonic cruise condition L/D = 8
- Supersonic cruise condition Isp = 3060 s
- Vehicle propellant mass fraction (PMF) = 0.47
- Takeoff T/W = 0.375
- Effective Dose Rate (51º Lat.) = 9.0 μSv/hr

NASA SBIR Contract #80NSSC22C0008

SAF Matrix – Aircraft 17

SpaceWorks

NASA

ID: SAF.M2.P50.R6100.20230518

Key Inputs

Mach 2
Cruise Speed

6,100 nmi
Range

50
Passenger Count

SAF
Fuel Type

OPERATOR METRICS

$7,400-$9,600
Ticket Price

0.6M
Pax/Year

25
Routes Captured

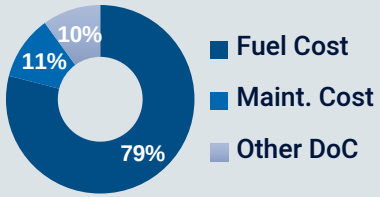

MANUFACTURER METRICS

$725M
Aircraft Price

$555M
Airframe Price

$43M x4
Engine Price

126
Aircraft Sold

KEY EVENTS & DATES

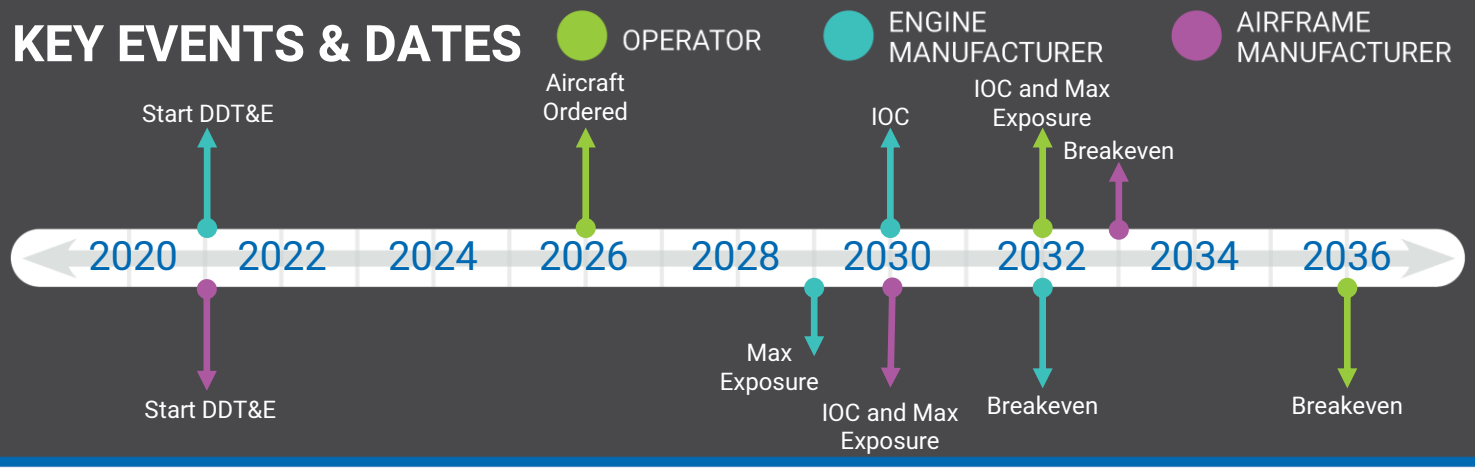

Business Results

OPERATOR

8%
ROIC (avg)

$1.0B
NPV

$5.4B
Max Exposure

ENGINE MANUFACTURER

19%
IRR

$704M
NPV

$3.1B
Max Exposure

AIRFRAME MANUFACTURER

19%
IRR

$2.5B
NPV

$11B
Max Exposure

BUSINESS CASE ANALYSIS

This aircraft is capturing 25 of 80 addressable routes that are within its design range which are a mix of Atlantic & Pacific Ocean routes.

NASA SBIR Contract #80NSSC22C0008

SAF Matrix – Aircraft 18

ID: SAF.M3.P50.R5700.20230518

Mach 3
Cruise Speed

5,700 nmi
Max Range

50
Passenger Count

SAF
Fuel Type

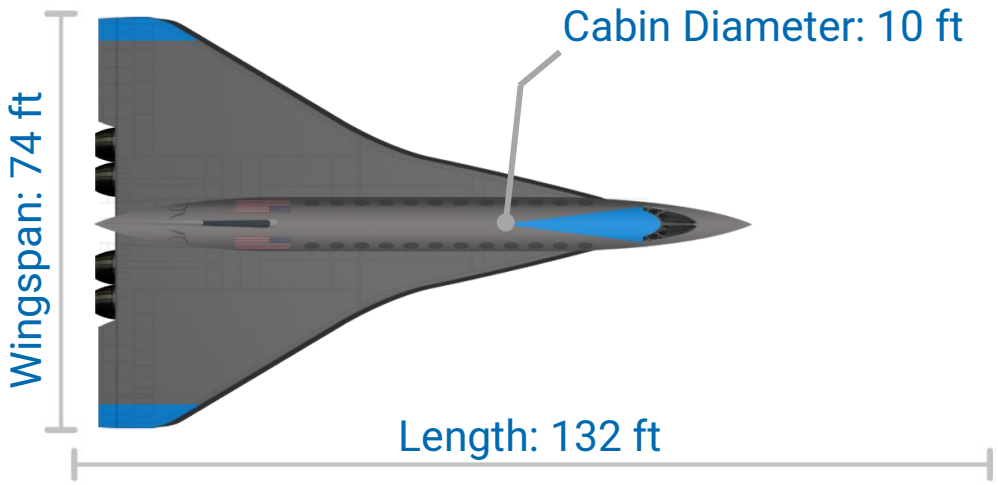

COST METRICS (FY21 USD)

DDT&E

$13B Airframe

$5.0B Engine

TFU

$206M Airframe

$47M Engine

ENVIRONMENTAL METRICS

97 EPNdB
Lateral Takeoff Noise

105 PNLdB
Sonic Boom

0.93 kg/km/pax
Emissions (CO2e)

0.29 kg/km/pax
Fuel Consumption Rate

502,000 lbm
MTOW

153,000 lbm
MEW

4 x 47,100 lbf
Engine Thrust SLS

4.1 hours
Gate-to-Gate Time
at Max Range

73,300 ft
Cruise Altitude

7,800 ft
Bal. Field Length SL

AIRCRAFT NOTES

- Supersonic cruise condition L/D = 6.4
- Supersonic cruise condition Isp = 2040 s
- Vehicle propellant mass fraction (PMF) = 0.47
- Takeoff T/W = 0.375
- Effective Dose Rate (51º Lat.) = 9.1 μSv/hr

NASA SBIR Contract #80NSSC22C0008

SAF Matrix – Aircraft 18

ID: SAF.M3.P50.R5700.20230518

Key Inputs

Mach 3
Cruise Speed

5,700 nmi
Range

50
Passenger Count

SAF
Fuel Type

OPERATOR METRICS

$11,400-$14,600
Ticket Price

0.2M
Pax/Year

10
Routes Captured

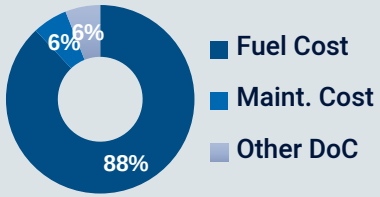

MANUFACTURER METRICS

$805M
Aircraft Price

$540M
Airframe Price

$66M x4
Engine Price

54
Aircraft Sold

KEY EVENTS & DATES

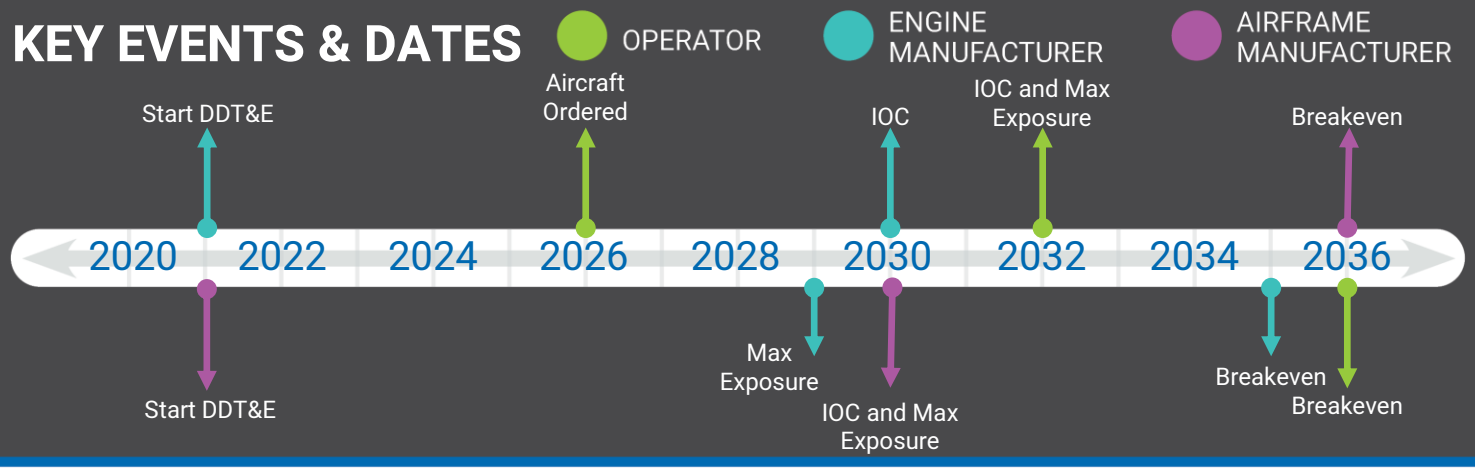

Business Results

OPERATOR

4%
ROIC (avg)

$452M
NPV

$2.2B
Max Exposure

ENGINE MANUFACTURER

11%
IRR

$-794M
NPV

$5.6B
Max Exposure

AIRFRAME MANUFACTURER

11%
IRR

$-2.4B
NPV

$17B
Max Exposure

BUSINESS CASE ANALYSIS

This aircraft is capturing 10 of 78 addressable routes that are within its design range which are a mix of Atlantic & Pacific Ocean routes.

NASA SBIR Contract #80NSSC22C0008

SAF Matrix – Aircraft 19

ID: SAF.M4.P50.R5400.20230518

Mach 4
Cruise Speed

5,400 nmi
Max Range

50
Passenger Count

SAF
Fuel Type

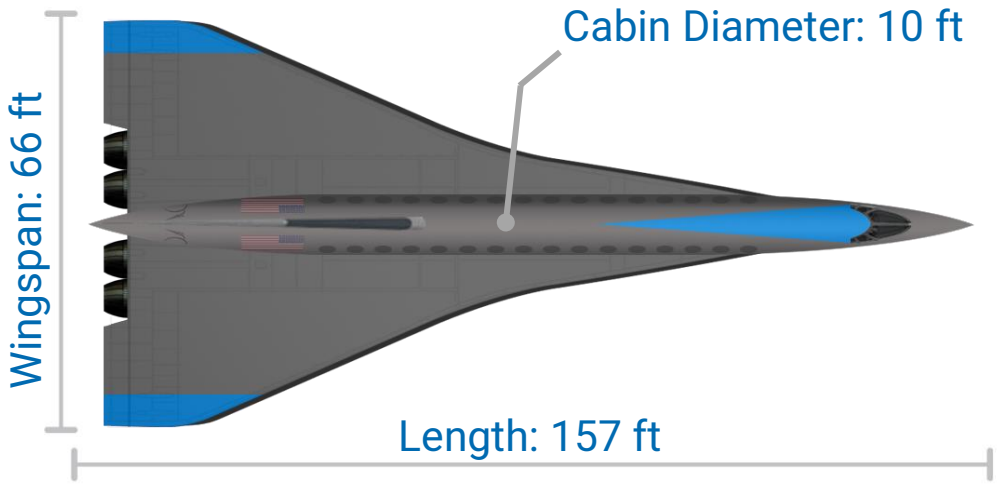

COST METRICS (FY21 USD)

DDT&E

$15B Airframe

$6.2B Engine

TFU

$235M Airframe

$70M Engine

ENVIRONMENTAL METRICS

97 EPNdB
Lateral Takeoff Noise

105 PNLdB
Sonic Boom

1.12 kg/km/pax
Emissions (CO_2e)

0.35 kg/km/pax
Fuel Consumption Rate

579,000 lbm
MTOW

180,400 lbm
MEW

4 x 54,300 lbf
Engine Thrust SLS

3.1 hours
Gate-to-Gate Time
at Max Range

85,500 ft
Cruise Altitude

9,100 ft
Bal. Field Length SL

AIRCRAFT NOTES

- Supersonic cruise condition L/D = 5.6
- Supersonic cruise condition Isp = 1631 s
- Vehicle propellant mass fraction (PMF) = 0.47
- Takeoff T/W = 0.375
- Effective Dose Rate (51° Lat.) = 8.5 μSv/hr

NASA SBIR Contract #80NSSC22C0008

SAF Matrix – Aircraft 19

SpaceWorks

NASA

ID: SAF.M4.P50.R5400.20230518

Key Inputs

Mach 4
Cruise Speed

5,400 nmi
Range

50
Passenger Count

SAF
Fuel Type

OPERATOR METRICS

$11,900-$14,900
Ticket Price

0.2M
Pax/Year

9
Routes Captured

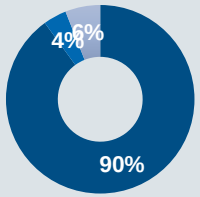

MANUFACTURER METRICS

$852M
Aircraft Price

$515M
Airframe Price

$84M x4
Engine Price

49
Aircraft Sold

KEY EVENTS & DATES

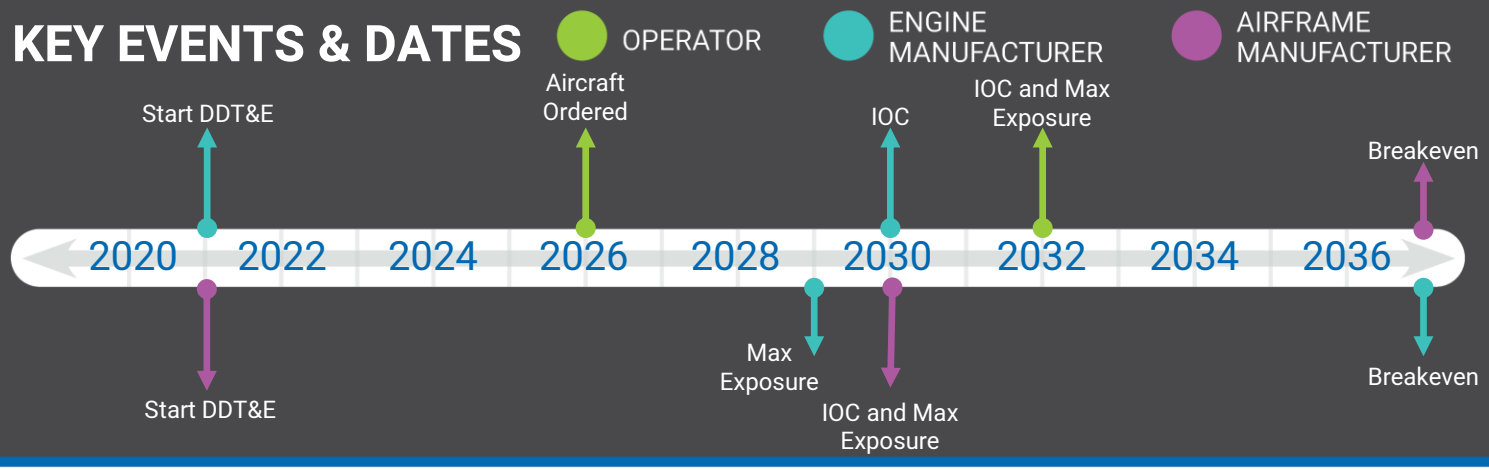

Business Results

OPERATOR

4%
ROIC (avg)

$220M
NPV

$2.2B
Max Exposure

ENGINE MANUFACTURER

9%
IRR

$-1.4B
NPV

$7.0B
Max Exposure

AIRFRAME MANUFACTURER

9%
IRR

$-3.6B
NPV

$20B
Max Exposure

BUSINESS CASE ANALYSIS

This aircraft is capturing 9 of 72 addressable routes that are within its design range which are a mix of Atlantic & Pacific Ocean routes.

NASA SBIR Contract #80NSSC22C0008

SAF Matrix – Aircraft 20

ID: SAF.M5.P50.R5000.20230518

Mach 5
Cruise Speed

5,000 nmi
Max Range

50
Passenger Count

SAF
Fuel Type

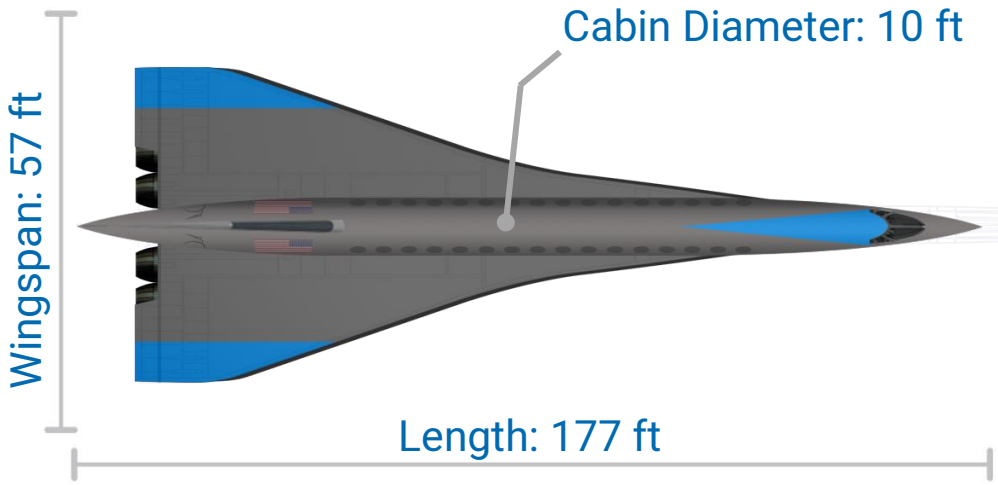

COST METRICS (FY21 USD)

DDT&E

$15B Airframe

$7.1B Engine

TFU

$237M Airframe

$86M Engine

ENVIRONMENTAL METRICS

97 EPNdB
Lateral Takeoff Noise

104 PNLdB
Sonic Boom

1.15 kg/km/pax
Emissions (CO_2e)

0.36 kg/km/pax
Fuel Consumption Rate

566,000 lbm
MTOW

187,100 lbm
MEW

4 x 53,000 lbf
Engine Thrust SLS

2.4 hours
Gate-to-Gate Time
at Max Range

95,100 ft
Cruise Altitude

10,400 ft
Bal. Field Length SL

AIRCRAFT NOTES

- Supersonic cruise condition L/D = 5.1
- Supersonic cruise condition Isp = 1325 s
- Vehicle propellant mass fraction (PMF) = 0.47
- Takeoff T/W = 0.375
- Effective Dose Rate (51° Lat.) = 8.1 μSv/hr

NASA SBIR Contract #80NSSC22C0008

SAF Matrix – Aircraft 20

ID: SAF.M5.P50.R5000.20230518

Key Inputs

Mach 5
Cruise Speed

5,000 nmi
Range

50
Passenger Count

SAF
Fuel Type

OPERATOR METRICS

$13,100-$16,000
Ticket Price

0.1M
Pax/Year

8
Routes Captured

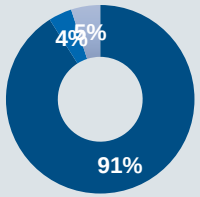

MANUFACTURER METRICS

$925M
Aircraft Price

$515M
Airframe Price

$103M x4
Engine Price

47
Aircraft Sold

KEY EVENTS & DATES

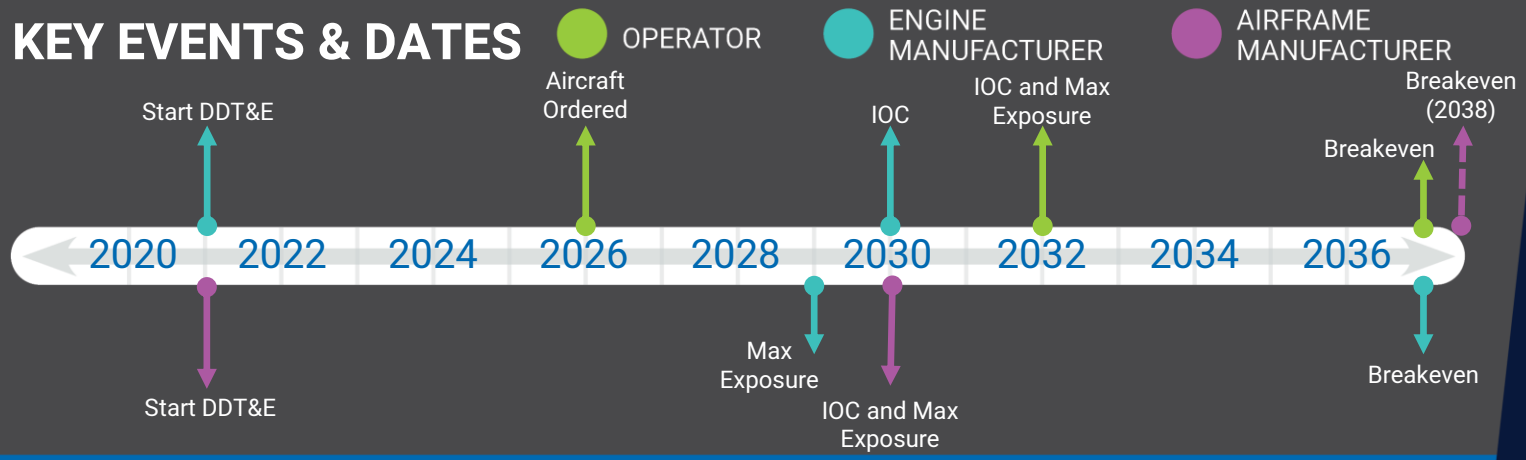

Business Results

OPERATOR

4%
ROIC (avg)

$221M
NPV

$2.3B
Max Exposure

ENGINE MANUFACTURER

9%
IRR

$-1.6B
NPV

$8.1B
Max Exposure

AIRFRAME MANUFACTURER

9%
IRR

$-3.7B
NPV

$20B
Max Exposure

BUSINESS CASE ANALYSIS

This aircraft is capturing 8 of 66 addressable routes that are within its design range which are a mix of Atlantic & Pacific Ocean routes.

NASA SBIR Contract #80NSSC22C0008

LNG Aircraft

- Cost Metrics and Financials updated with latest Market Data

NASA SBIR Contract #80NSSC22C0008

LNG Matrix – Aircraft 1

ID: LNG.M1.5.P20.R4000.20230518

Mach 1.5
Cruise Speed

4,000 nmi
Max Range

20
Passenger Count

LNG
Fuel Type

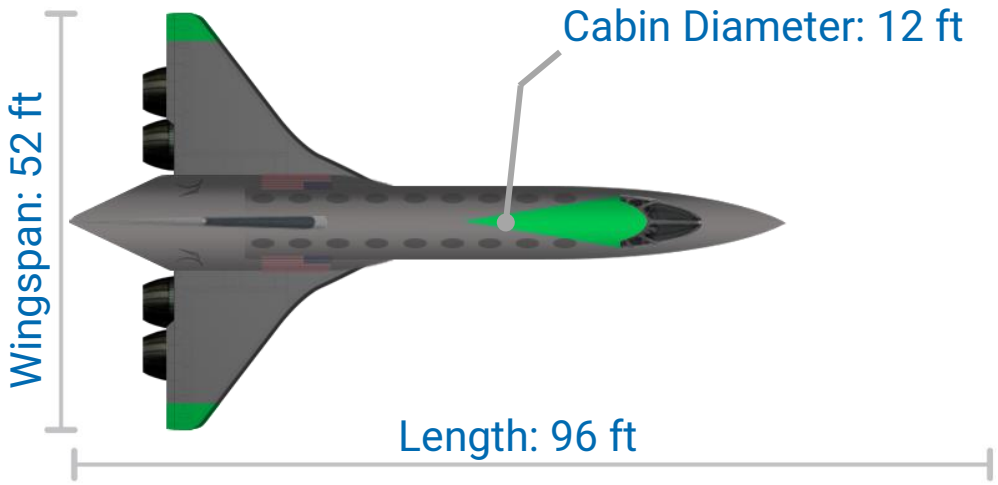

80,000 lbm
MTOW

39,600 lbm
MEW

4 x 7,500 lbf
Engine Thrust SLS

5.5 hours
Gate-to-Gate Time
at Max Range

44,400 ft
Cruise Altitude

6,400 ft
Bal. Field Length SL

COST METRICS (FY21 USD)

DDT&E

$4.7B Airframe

$2.2B Engine

TFU

$60M Airframe

$4.8M Engine

ENVIRONMENTAL METRICS

89 EPNdB
Lateral Takeoff Noise

104 PNLdB
Sonic Boom

0.29 kg/km/pax
Emissions (CO_2e)

0.1 kg/km/pax
Fuel Consumption Rate

AIRCRAFT NOTES

- Supersonic cruise condition L/D = 9
- Supersonic cruise condition Isp = 4609 s
- Vehicle propellant mass fraction (PMF) = 0.47
- Takeoff T/W = 0.375
- Effective Dose Rate (51° Lat.) = 6.4 μSv/hr

NASA SBIR Contract #80NSSC22C0008

LNG Matrix – Aircraft 1

SpaceWorks

NASA

ID: LNG.M1.5.P20.R4000.20230518

Key Inputs

Mach 1.5
Cruise Speed

4,000 nmi
Range

20
Passenger Count

LNG
Fuel Type

OPERATOR METRICS

$5,400-$6,100
Ticket Price

0.6M
Pax/Year

24
Routes Captured

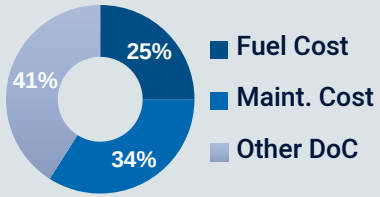

MANUFACTURER METRICS

$285M
Aircraft Price

$218M
Airframe Price

$17M x4
Engine Price

275
Aircraft Sold

KEY EVENTS & DATES

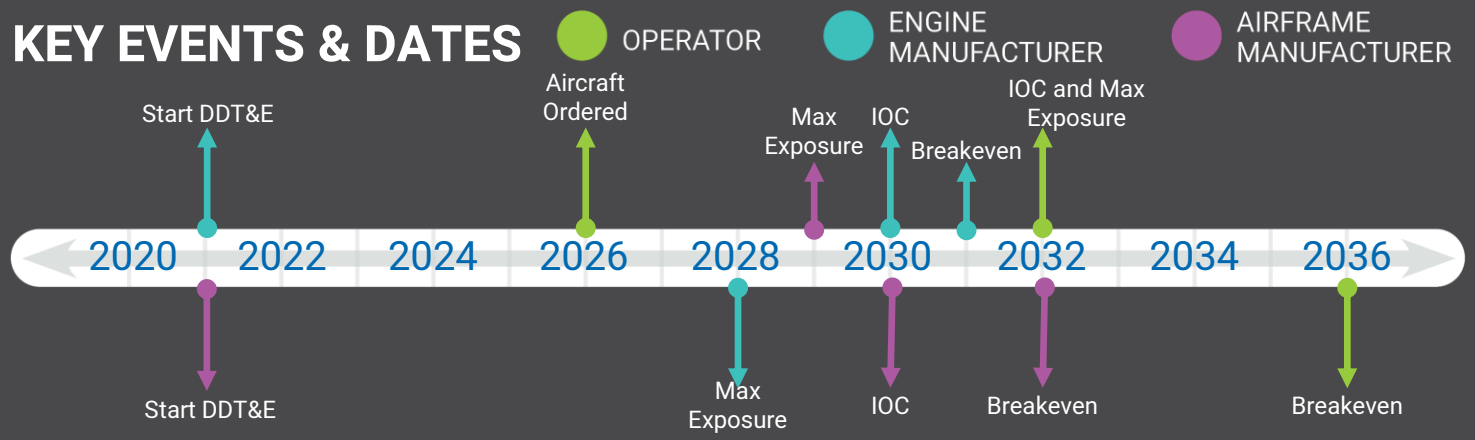

Business Results

OPERATOR

10%
ROIC (avg)

$1.4B
NPV

$4.8B
Max Exposure

ENGINE MANUFACTURER

24%
IRR

$971M
NPV

$1.8B
Max Exposure

AIRFRAME MANUFACTURER

24%
IRR

$2.9B
NPV

$5.2B
Max Exposure

BUSINESS CASE ANALYSIS

This aircraft is capturing 24 of 37 addressable routes that are within its design range which are exclusively Atlantic Ocean routes.

NASA SBIR Contract #80NSSC22C0008

LNG Matrix – Aircraft 2

ID: LNG.M2.P20.R4000.20230518

Mach 2
Cruise Speed

4,000 nmi
Max Range

20
Passenger Count

LNG
Fuel Type

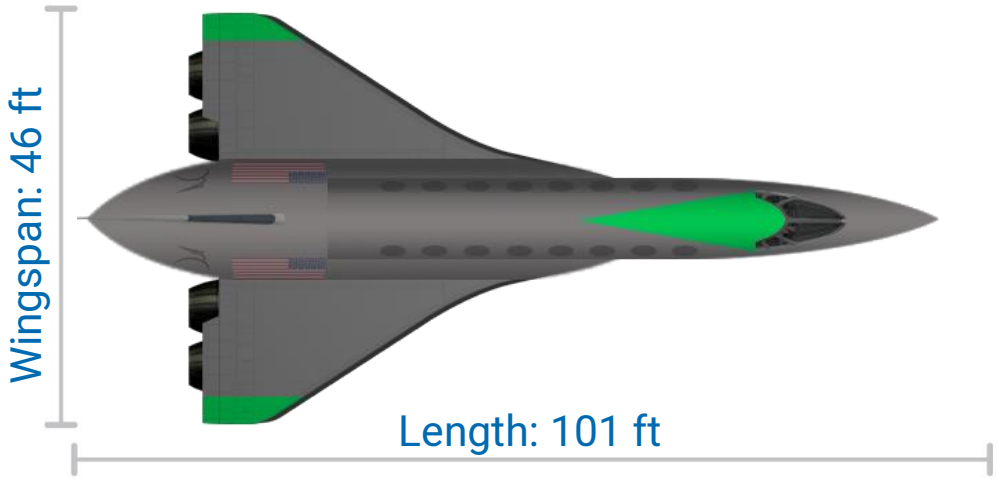

COST METRICS (FY21 USD)

DDT&E

$5.3B Airframe

$2.7B Engine

TFU

$68M Airframe

$7.0M Engine

ENVIRONMENTAL METRICS

90 EPNdB
Lateral Takeoff Noise

103 PNLdB
Sonic Boom

0.4 kg/km/pax
Emissions (CO2e)

0.14 kg/km/pax
Fuel Consumption Rate

99,000 lbm
MTOW

45,200 lbm
MEW

4 x 9,300 lbf
Engine Thrust SLS

4.4 hours
Gate-to-Gate Time
at Max Range

56,300 ft
Cruise Altitude

7,100 ft
Bal. Field Length SL

AIRCRAFT NOTES

- Supersonic cruise condition L/D = 7.5
- Supersonic cruise condition Isp = 3465 s
- Vehicle propellant mass fraction (PMF) = 0.47
- Takeoff T/W = 0.375
- Effective Dose Rate (51º Lat.) = 9.0 μSv/hr

NASA SBIR Contract #80NSSC22C0008

LNG Matrix – Aircraft 2

SpaceWorks

NASA

ID: LNG.M2.P20.R4000.20230518

Key Inputs

Mach 2
Cruise Speed

4,000 nmi
Range

20
Passenger Count

LNG
Fuel Type

OPERATOR METRICS

$5,000-$5,600
Ticket Price

0.8M
Pax/Year

26
Routes Captured

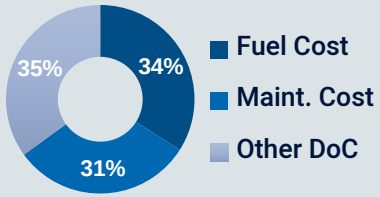

MANUFACTURER METRICS

$317M
Aircraft Price

$237M
Airframe Price

$20M x4
Engine Price

277
Aircraft Sold

KEY EVENTS & DATES

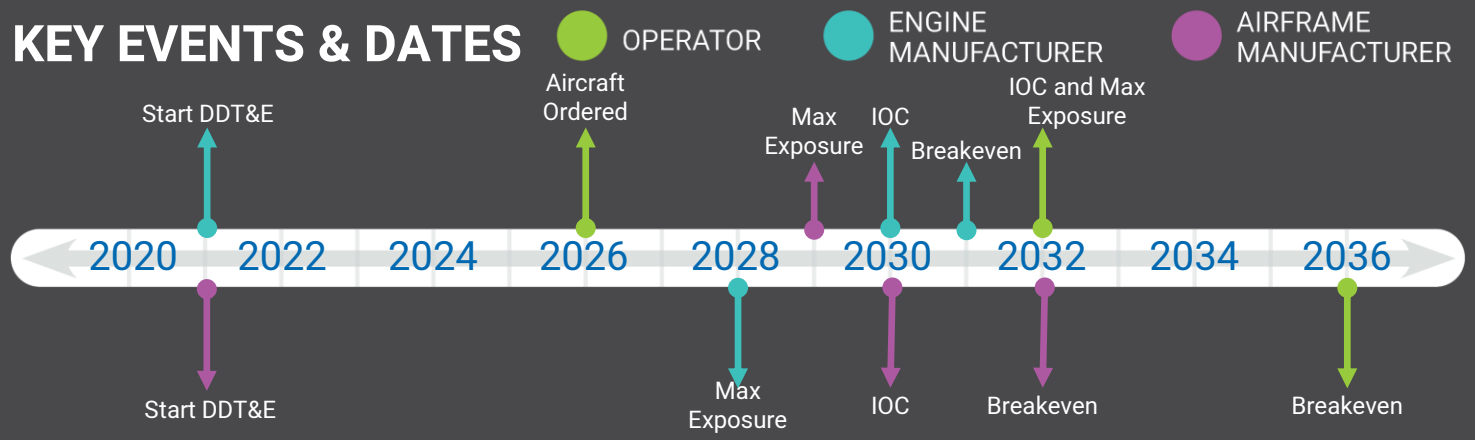

Business Results

OPERATOR

9%
ROIC (avg)

$1.6B
NPV

$5.4B
Max Exposure

ENGINE MANUFACTURER

23%
IRR

$1.1B
NPV

$2.2B
Max Exposure

AIRFRAME MANUFACTURER

23%
IRR

$2.9B
NPV

$5.8B
Max Exposure

BUSINESS CASE ANALYSIS

This aircraft is capturing 26 of 37 addressable routes that are within its design range which are exclusively Atlantic Ocean routes.

NASA SBIR Contract #80NSSC22C0008

LNG Matrix – Aircraft 3

ID: LNG.M3.P20.R4000.20230518

Mach 3
Cruise Speed

4,000 nmi
Max Range

20
Passenger Count

LNG
Fuel Type

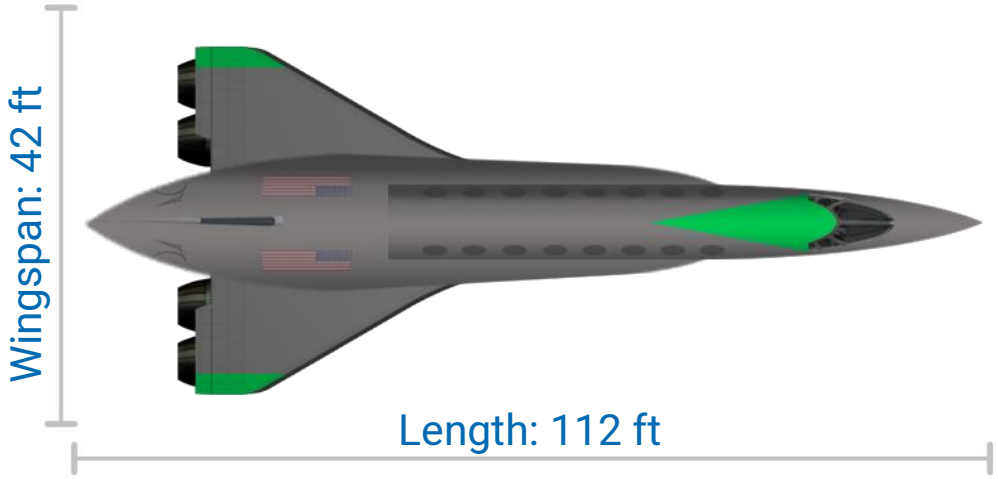

143,000 lbm
MTOW

59,300 lbm
MEW

4 x 13,400 lbf
Engine Thrust SLS

3.1 hours
Gate-to-Gate Time
at Max Range

73,300 ft
Cruise Altitude

8,500 ft
Bal. Field Length SL

COST METRICS (FY21 USD)

DDT&E

$6.4B Airframe

$3.8B Engine

TFU

$87M Airframe

$14M Engine

ENVIRONMENTAL METRICS

91 EPNdB
Lateral Takeoff Noise

101 PNLdB
Sonic Boom

0.67 kg/km/pax
Emissions (CO_2e)

0.23 kg/km/pax
Fuel Consumption Rate

AIRCRAFT NOTES

- Supersonic cruise condition L/D = 6
- Supersonic cruise condition Isp = 2310 s
- Vehicle propellant mass fraction (PMF) = 0.47
- Takeoff T/W = 0.375
- Effective Dose Rate (51° Lat.) = 9.1 μSv/hr

NASA SBIR Contract #80NSSC22C0008

LNG Matrix – Aircraft 3

SpaceWorks

NASA

ID: LNG.M3.P20.R4000.20230518

Key Inputs

Mach 3
Cruise Speed

4,000 nmi
Range

20
Passenger Count

LNG
Fuel Type

OPERATOR METRICS

$7,400-$8,300
Ticket Price

0.4M
Pax/Year

21
Routes Captured

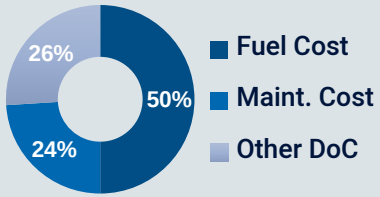

MANUFACTURER METRICS

$481M
Aircraft Price

$331M
Airframe Price

$37M x4
Engine Price

156
Aircraft Sold

KEY EVENTS & DATES

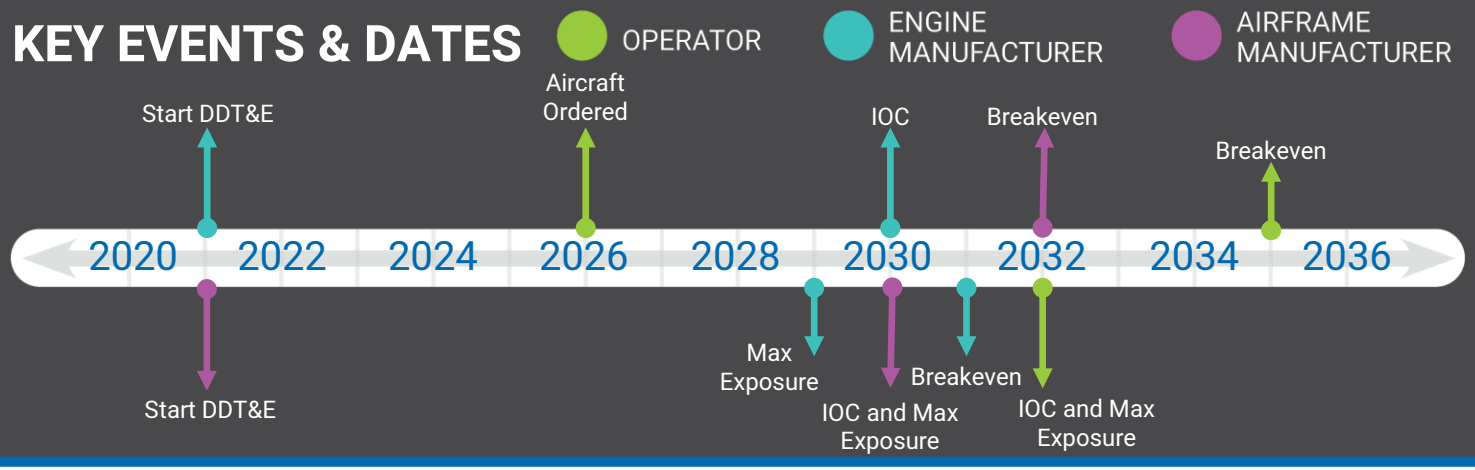

Business Results

OPERATOR

8%
ROIC (avg)

$1.2B
NPV

$4.8B
Max Exposure

ENGINE MANUFACTURER

21%
IRR

$1.1B
NPV

$3.5B
Max Exposure

AIRFRAME MANUFACTURER

21%
IRR

$2.6B
NPV

$7.8B
Max Exposure

BUSINESS CASE ANALYSIS

This aircraft is capturing 21 of 37 addressable routes that are within its design range which are exclusively Atlantic Ocean routes.

NASA SBIR Contract #80NSSC22C0008

LNG Matrix – Aircraft 4

ID: LNG.M4.P20.R4000.20230518

Mach 4
Cruise Speed

4,000 nmi
Max Range

20
Passenger Count

LNG
Fuel Type

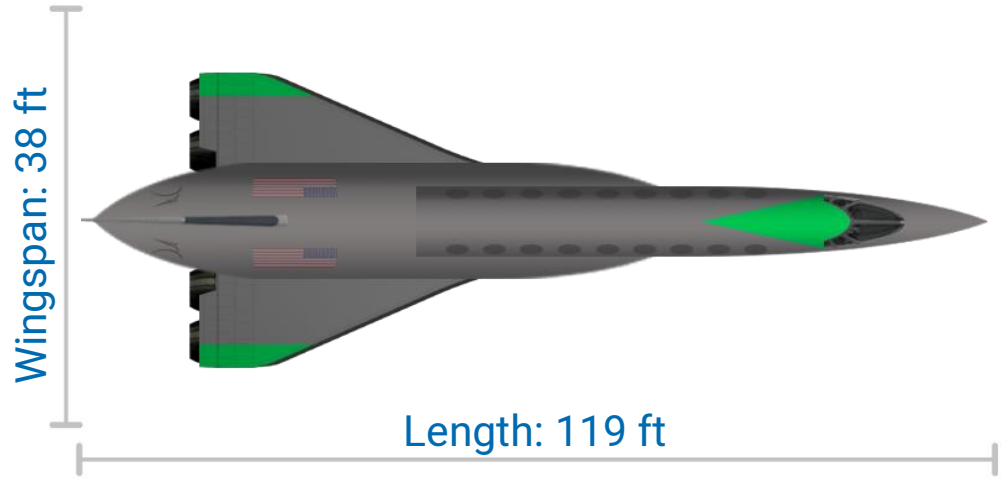

167,000 lbm
MTOW

68,500 lbm
MEW

4 x 15,600 lbf
Engine Thrust SLS

2.5 hours
Gate-to-Gate Time
at Max Range

85,500 ft
Cruise Altitude

10,100 ft
Bal. Field Length SL

COST METRICS (FY21 USD)

DDT&E

$7.1B Airframe

$4.7B Engine

TFU

$99M Airframe

$21M Engine

ENVIRONMENTAL METRICS

91 EPNdB
Lateral Takeoff Noise

101 PNLdB
Sonic Boom

0.8 kg/km/pax
Emissions (CO_2e)

0.28 kg/km/pax
Fuel Consumption Rate

AIRCRAFT NOTES

- Supersonic cruise condition L/D = 5.2
- Supersonic cruise condition Isp = 1847 s
- Vehicle propellant mass fraction (PMF) = 0.47
- Takeoff T/W = 0.375
- Effective Dose Rate (51° Lat.) = 8.5 μSv/hr

NASA SBIR Contract #80NSSC22C0008

LNG Matrix – Aircraft 4

SpaceWorks

NASA

ID: LNG.M4.P20.R4000.20230518

Key Inputs

Mach 4
Cruise Speed

4,000 nmi
Range

20
Passenger Count

LNG
Fuel Type

OPERATOR METRICS

$7,800-$8,800
Ticket Price

0.4M
Pax/Year

21
Routes Captured

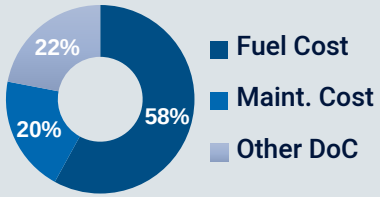

MANUFACTURER METRICS

$499M
Aircraft Price

$322M
Airframe Price

$44M x4
Engine Price

156
Aircraft Sold

KEY EVENTS & DATES

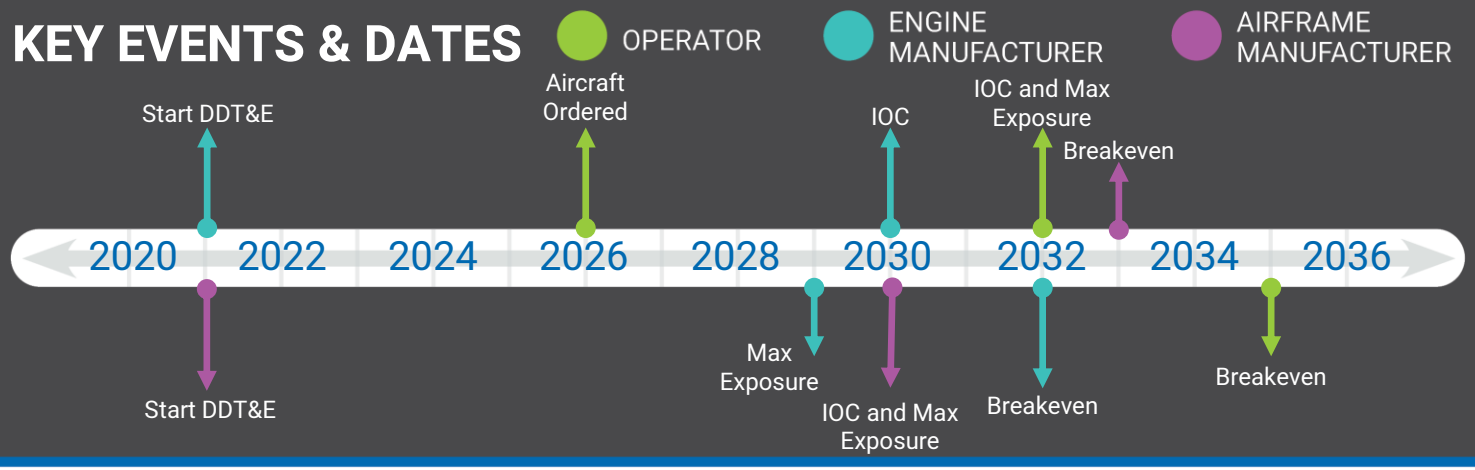

Business Results

OPERATOR

8%
ROIC (avg)

$1.2B
NPV

$5.0B
Max Exposure

ENGINE MANUFACTURER

19%
IRR

$913M
NPV

$4.4B
Max Exposure

AIRFRAME MANUFACTURER

19%
IRR

$1.9B
NPV

$9.0B
Max Exposure

BUSINESS CASE ANALYSIS

This aircraft is capturing 21 of 37 addressable routes that are within its design range which are exclusively Atlantic Ocean routes.

NASA SBIR Contract #80NSSC22C0008

LNG Matrix – Aircraft 5

ID: LNG.M5.P20.R4000.20230518

Mach 5
Cruise Speed

4,000 nmi
Max Range

20
Passenger Count

LNG
Fuel Type

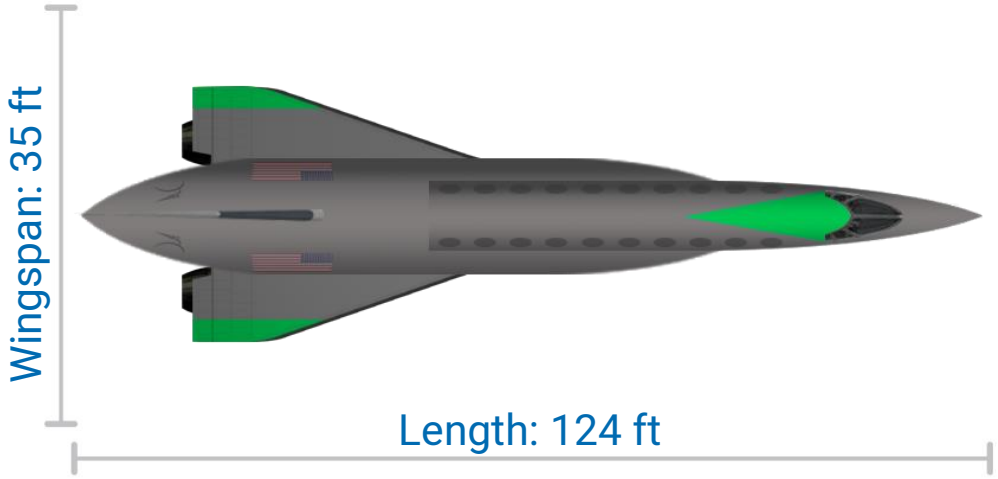

187,000 lbm MTOW	**77,800 lbm** MEW	**4 x 17,600 lbf** Engine Thrust SLS
2.1 hours Gate-to-Gate Time at Max Range	**95,100 ft** Cruise Altitude	**11,700 ft** Bal. Field Length SL

COST METRICS (FY21 USD)

DDT&E

$7.7B Airframe

$5.7B Engine

TFU

$110M Airframe

$29M Engine

ENVIRONMENTAL METRICS

92 EPNdB
Lateral Takeoff Noise

101 PNLdB
Sonic Boom

0.9 kg/km/pax
Emissions (CO_2e)

0.31 kg/km/pax
Fuel Consumption Rate

AIRCRAFT NOTES

- Supersonic cruise condition L/D = 4.8
- Supersonic cruise condition Isp = 1500 s
- Vehicle propellant mass fraction (PMF) = 0.47
- Takeoff T/W = 0.375
- Effective Dose Rate (51° Lat.) = 8.1 μSv/hr

NASA SBIR Contract #80NSSC22C0008

LNG Matrix – Aircraft 5

SpaceWorks

NASA

ID: LNG.M5.P20.R4000.20230518

Key Inputs

Mach 5
Cruise Speed

4,000 nmi
Range

20
Passenger Count

LNG
Fuel Type

OPERATOR METRICS

$8,300-$9,400
Ticket Price

0.4M
Pax/Year

21
Routes Captured

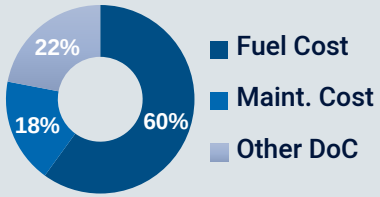

MANUFACTURER METRICS

$513M
Aircraft Price

$308M
Airframe Price

$51M x4
Engine Price

156
Aircraft Sold

KEY EVENTS & DATES

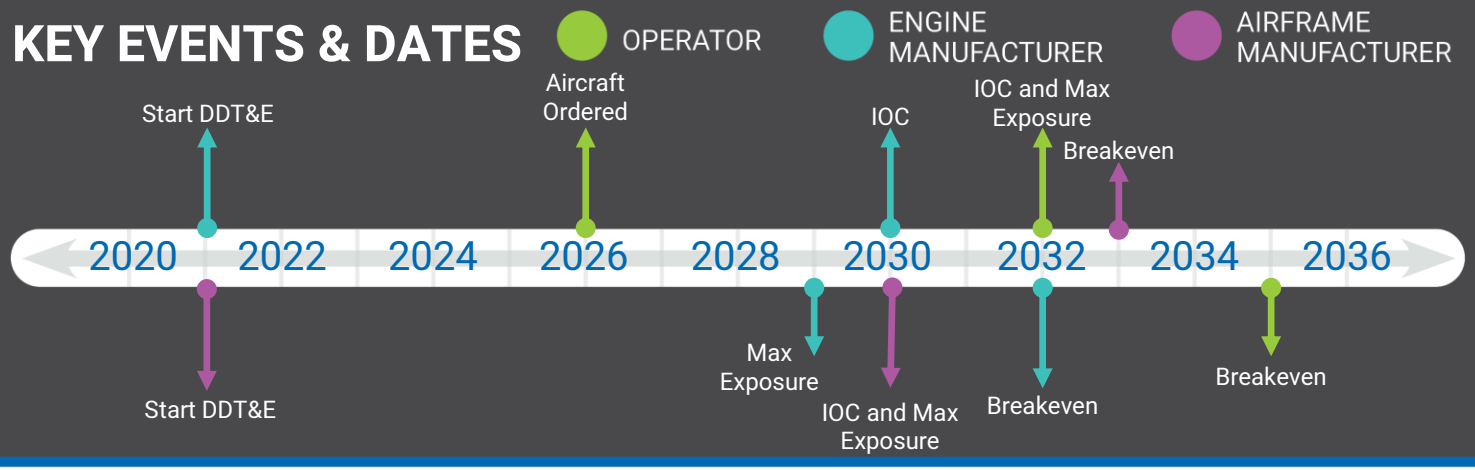

Business Results

OPERATOR

7%
ROIC (avg)

$1.2B
NPV

$5.2B
Max Exposure

ENGINE MANUFACTURER

17%
IRR

$579M
NPV

$5.5B
Max Exposure

AIRFRAME MANUFACTURER

17%
IRR

$1.1B
NPV

$10B
Max Exposure

BUSINESS CASE ANALYSIS

This aircraft is capturing 21 of 37 addressable routes that are within its design range which are exclusively Atlantic Ocean routes.

NASA SBIR Contract #80NSSC22C0008

LNG Matrix – Aircraft 6

ID: LNG.M1.5.P50.R4000.20230518

Mach 1.5
Cruise Speed

4,000 nmi
Max Range

50
Passenger Count

LNG
Fuel Type

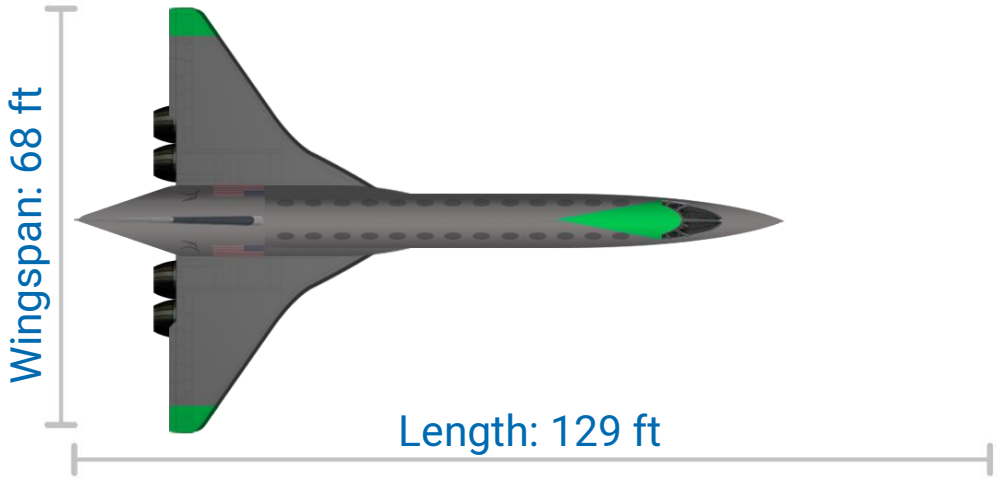

COST METRICS (FY21 USD)

DDT&E

$6.6B Airframe

$2.8B Engine

TFU

$90M Airframe

$8.5M Engine

ENVIRONMENTAL METRICS

91 EPNdB
Lateral Takeoff Noise

106 PNLdB
Sonic Boom

0.21 kg/km/pax
Emissions (CO_2e)

0.07 kg/km/pax
Fuel Consumption Rate

142,000 lbm
MTOW

67,900 lbm
MEW

4 x 13,300 lbf
Engine Thrust SLS

5.5 hours
Gate-to-Gate Time
at Max Range

44,400 ft
Cruise Altitude

6,400 ft
Bal. Field Length SL

AIRCRAFT NOTES

- Supersonic cruise condition L/D = 9
- Supersonic cruise condition Isp = 4609 s
- Vehicle propellant mass fraction (PMF) = 0.47
- Takeoff T/W = 0.375
- Effective Dose Rate (51° Lat.) = 6.4 μSv/hr

NASA SBIR Contract #80NSSC22C0008

LNG Matrix – Aircraft 6

SpaceWorks

NASA

ID: LNG.M1.5.P50.R4000.20230518

Key Inputs

Mach 1.5
Cruise Speed

4,000 nmi
Range

50
Passenger Count

LNG
Fuel Type

OPERATOR METRICS

$4,600-$5,200
Ticket Price

0.7M
Pax/Year

19
Routes Captured

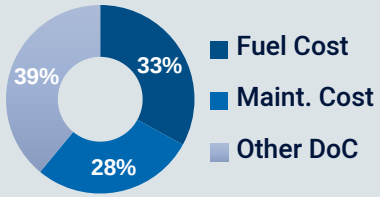

MANUFACTURER METRICS

$486M
Aircraft Price

$368M
Airframe Price

$29M x4
Engine Price

156
Aircraft Sold

KEY EVENTS & DATES

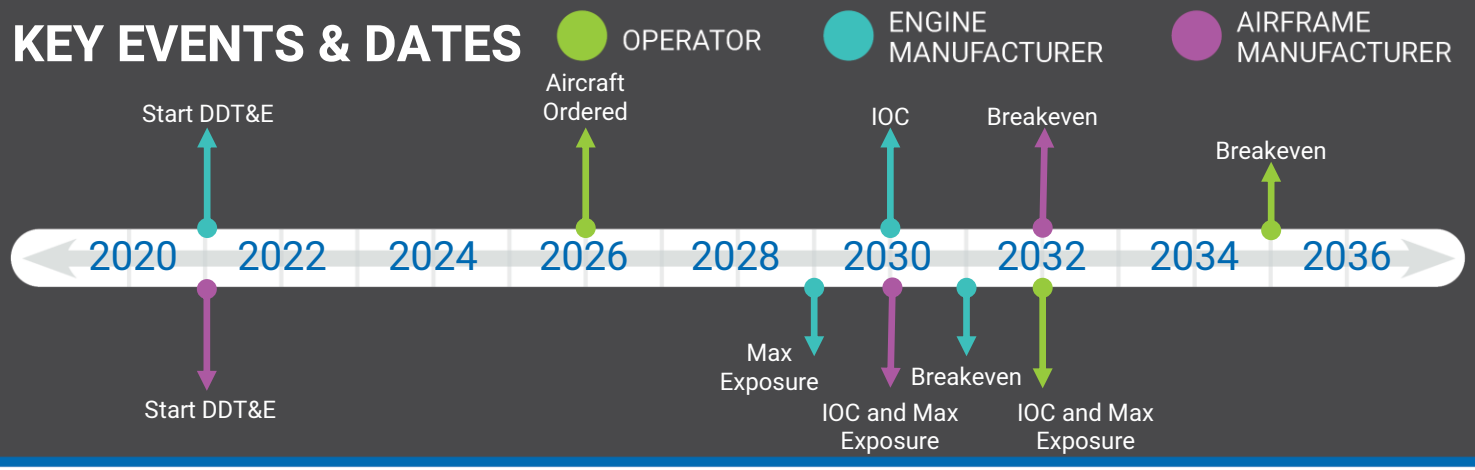

Business Results

OPERATOR

9%
ROIC (avg)

$1.2B
NPV

$4.7B
Max Exposure

ENGINE MANUFACTURER

22%
IRR

$1.0B
NPV

$2.5B
Max Exposure

AIRFRAME MANUFACTURER

22%
IRR

$3.2B
NPV

$7.4B
Max Exposure

BUSINESS CASE ANALYSIS

This aircraft is capturing 19 of 37 addressable routes that are within its design range which are exclusively Atlantic Ocean routes.

NASA SBIR Contract #80NSSC22C0008

LNG Matrix – Aircraft 7

ID: LNG.M2.P50.R4000.20230518

Mach 2
Cruise Speed

4,000 nmi
Max Range

50
Passenger Count

LNG
Fuel Type

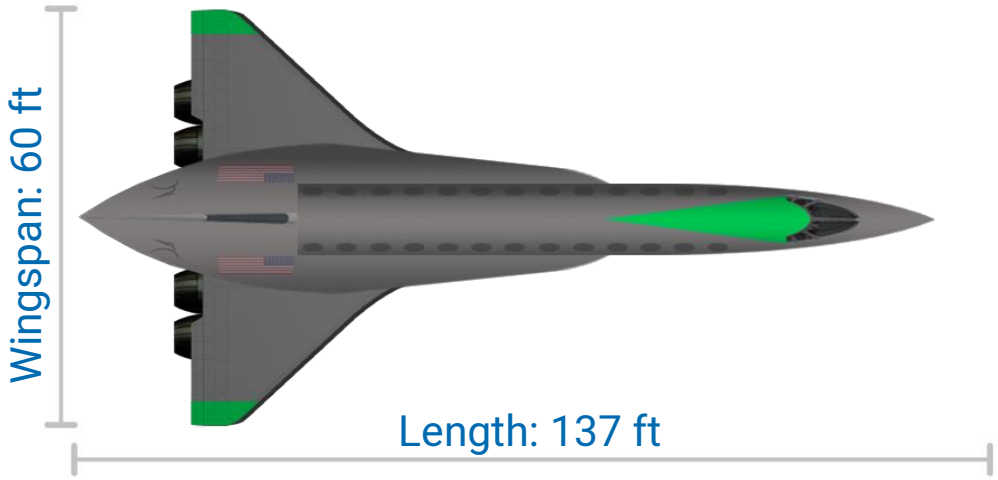

COST METRICS (FY21 USD)

DDT&E

$7.4B Airframe

$3.4B Engine

TFU

$103M Airframe

$12M Engine

ENVIRONMENTAL METRICS

91 EPNdB
Lateral Takeoff Noise

105 PNLdB
Sonic Boom

0.29 kg/km/pax
Emissions (CO2e)

0.1 kg/km/pax
Fuel Consumption Rate

175,000 lbm
MTOW

77,700 lbm
MEW

4 x 16,400 lbf
Engine Thrust SLS

4.4 hours
Gate-to-Gate Time
at Max Range

56,300 ft
Cruise Altitude

7,100 ft
Bal. Field Length SL

AIRCRAFT NOTES

- Supersonic cruise condition L/D = 7.5
- Supersonic cruise condition Isp = 3465 s
- Vehicle propellant mass fraction (PMF) = 0.47
- Takeoff T/W = 0.375
- Effective Dose Rate (51º Lat.) = 9.0 μSv/hr

NASA SBIR Contract #80NSSC22C0008

LNG Matrix – Aircraft 7

SpaceWorks

NASA

ID: LNG.M2.P50.R4000.20230518

Key Inputs

Mach 2
Cruise Speed

4,000 nmi
Range

50
Passenger Count

LNG
Fuel Type

OPERATOR METRICS

$4,300-$4,900
Ticket Price

0.9M
Pax/Year

21
Routes Captured

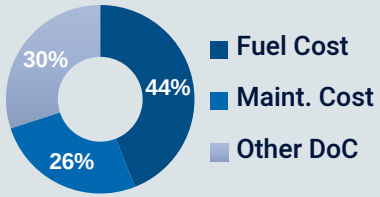

MANUFACTURER METRICS

$536M
Aircraft Price

$396M
Airframe Price

$35M x4
Engine Price

156
Aircraft Sold

KEY EVENTS & DATES

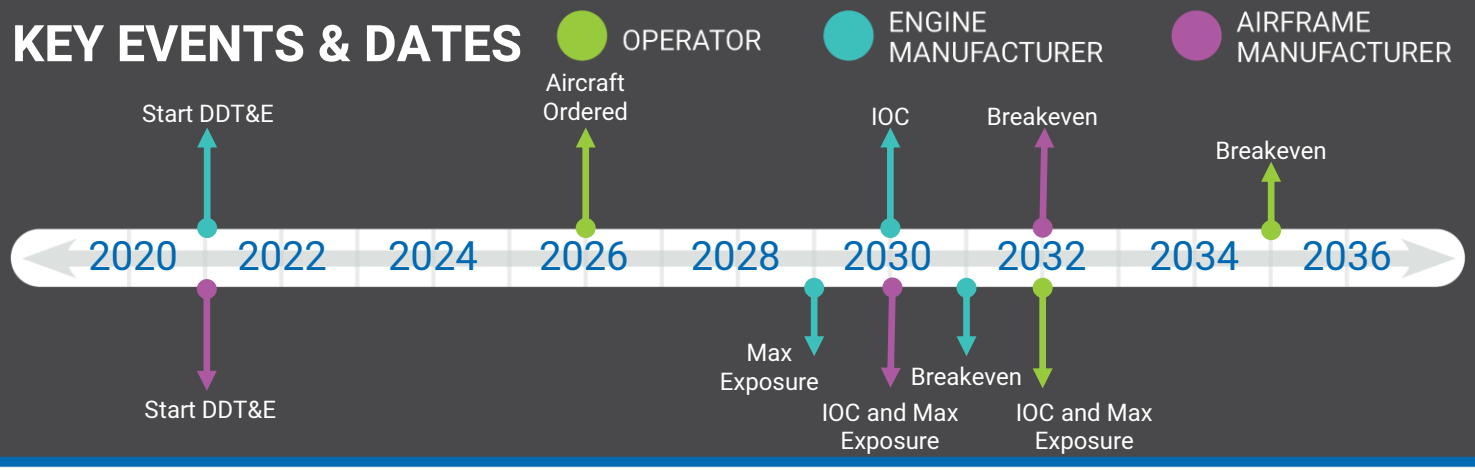

Business Results

OPERATOR

9%
ROIC (avg)

$1.3B
NPV

$5.2B
Max Exposure

ENGINE MANUFACTURER

21%
IRR

$1.1B
NPV

$3.1B
Max Exposure

AIRFRAME MANUFACTURER

21%
IRR

$3.0B
NPV

$8.4B
Max Exposure

BUSINESS CASE ANALYSIS

This aircraft is capturing 21 of 37 addressable routes that are within its design range which are exclusively Atlantic Ocean routes.

NASA SBIR Contract #80NSSC22C0008

LNG Matrix – Aircraft 8

ID: LNG.M3.P50.R4000.20230518

Mach 3
Cruise Speed

4,000 nmi
Max Range

50
Passenger Count

LNG
Fuel Type

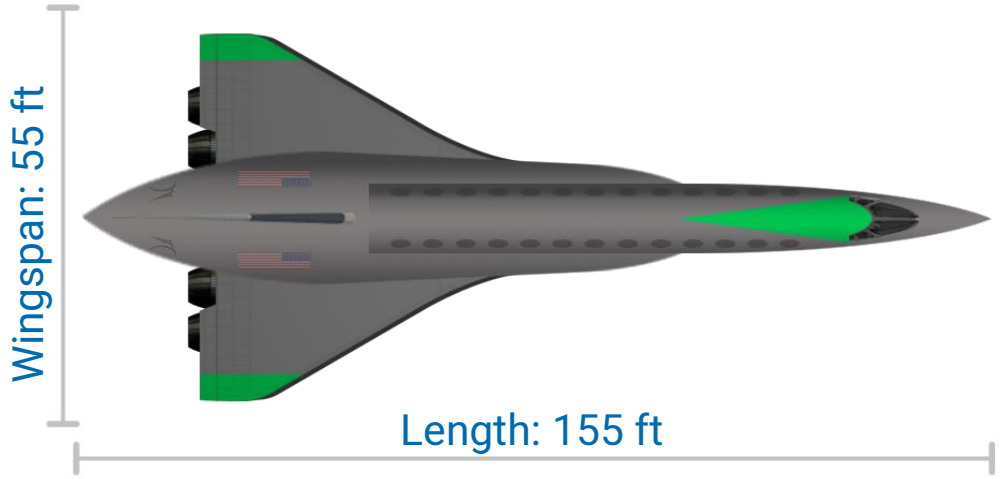

COST METRICS (FY21 USD)

DDT&E

$9.2B Airframe

$4.7B Engine

TFU

$133M Airframe

$24M Engine

ENVIRONMENTAL METRICS

93 EPNdB
Lateral Takeoff Noise

103 PNLdB
Sonic Boom

0.47 kg/km/pax
Emissions (CO2e)

0.16 kg/km/pax
Fuel Consumption Rate

251,000 lbm
MTOW

101,900 lbm
MEW

4 x 23,500 lbf
Engine Thrust SLS

3.1 hours
Gate-to-Gate Time
at Max Range

73,300 ft
Cruise Altitude

8,500 ft
Bal. Field Length SL

AIRCRAFT NOTES

- Supersonic cruise condition L/D = 6
- Supersonic cruise condition Isp = 2310 s
- Vehicle propellant mass fraction (PMF) = 0.47
- Takeoff T/W = 0.375
- Effective Dose Rate (51º Lat.) = 9.1 μSv/hr

NASA SBIR Contract #80NSSC22C0008

LNG Matrix – Aircraft 8

SpaceWorks

NASA

ID: LNG.M3.P50.R4000.20230518

Key Inputs

Mach 3
Cruise Speed

4,000 nmi
Range

50
Passenger Count

LNG
Fuel Type

OPERATOR METRICS

$8,800-$9,900
Ticket Price

0.2M
Pax/Year

10
Routes Captured

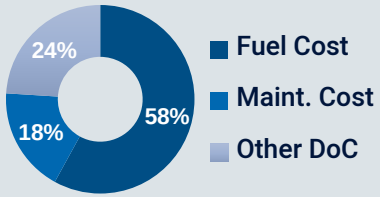

MANUFACTURER METRICS

$1.0B
Aircraft Price

$680M
Airframe Price

$84M x4
Engine Price

57
Aircraft Sold

KEY EVENTS & DATES

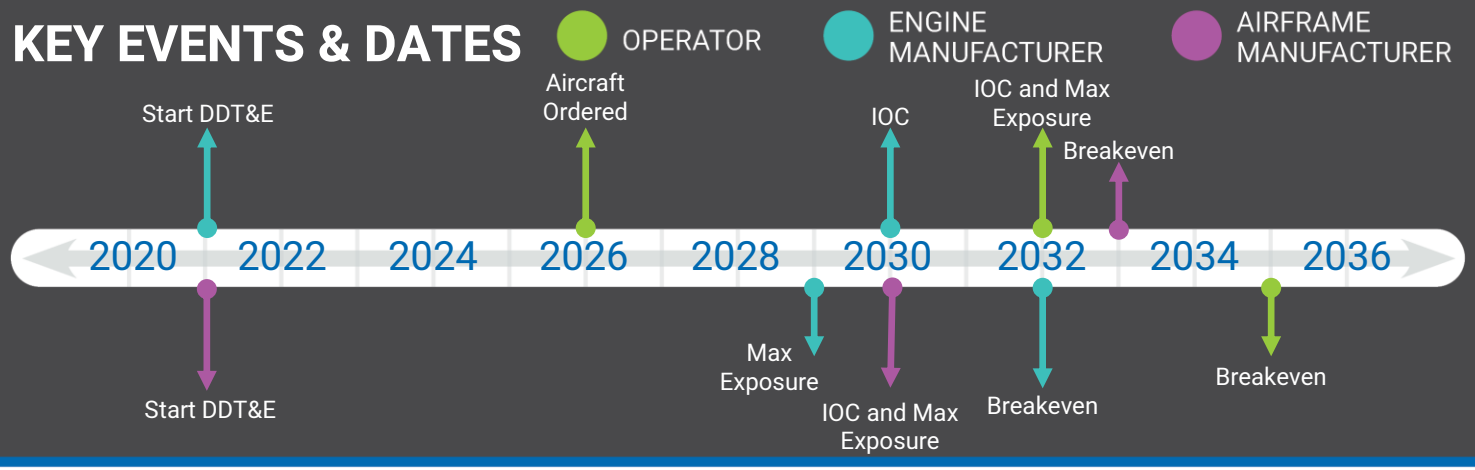

Business Results

OPERATOR

7%
ROIC (avg)

$701M
NPV

$3.1B
Max Exposure

ENGINE MANUFACTURER

18%
IRR

$818M
NPV

$5.1B
Max Exposure

AIRFRAME MANUFACTURER

18%
IRR

$2.2B
NPV

$12B
Max Exposure

BUSINESS CASE ANALYSIS

This aircraft is capturing 10 of 37 addressable routes that are within its design range which are exclusively Atlantic Ocean routes.

NASA SBIR Contract #80NSSC22C0008

LNG Matrix – Aircraft 9

ID: LNG.M4.P50.R4000.20230518

Mach 4
Cruise Speed

4,000 nmi
Max Range

50
Passenger Count

LNG
Fuel Type

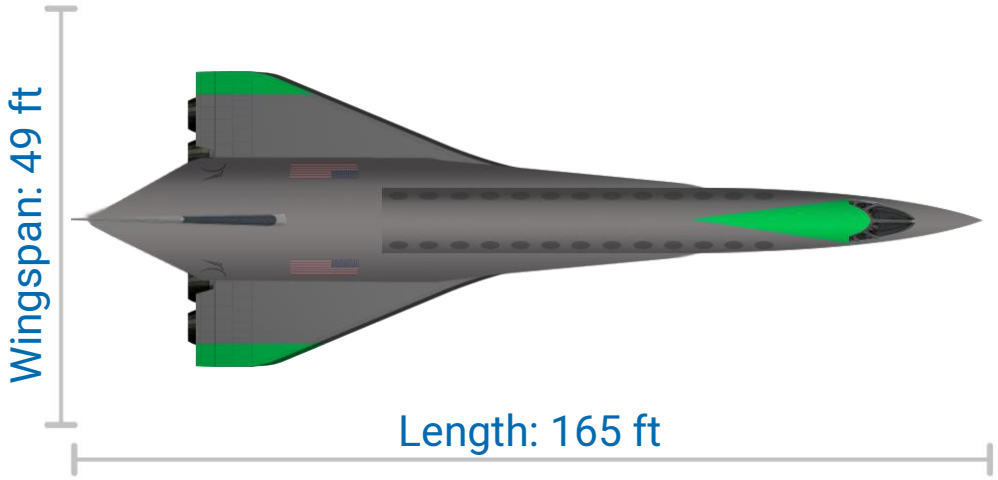

COST METRICS (FY21 USD)

DDT&E

$10B Airframe

$5.9B Engine

TFU

$150M Airframe

$36M Engine

ENVIRONMENTAL METRICS

94 EPNdB
Lateral Takeoff Noise

103 PNLdB
Sonic Boom

0.55 kg/km/pax
Emissions (CO2e)

0.19 kg/km/pax
Fuel Consumption Rate

290,000 lbm
MTOW

117,000 lbm
MEW

4 x 27,200 lbf
Engine Thrust SLS

2.5 hours
Gate-to-Gate Time
at Max Range

85,500 ft
Cruise Altitude

10,100 ft
Bal. Field Length SL

AIRCRAFT NOTES

- Supersonic cruise condition L/D = 5.2
- Supersonic cruise condition Isp = 1847 s
- Vehicle propellant mass fraction (PMF) = 0.47
- Takeoff T/W = 0.375
- Effective Dose Rate (51º Lat.) = 8.5 μSv/hr

NASA SBIR Contract #80NSSC22C0008

LNG Matrix – Aircraft 9

SpaceWorks

NASA

ID: LNG.M4.P50.R4000.20230518

Key Inputs

Mach 4
Cruise Speed

4,000 nmi
Range

50
Passenger Count

LNG
Fuel Type

OPERATOR METRICS

$9,400-$10,500
Ticket Price

0.2M
Pax/Year

10
Routes Captured

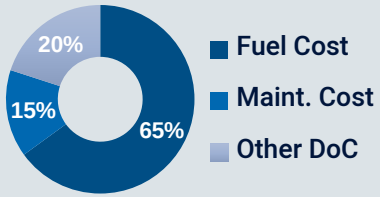

MANUFACTURER METRICS

$1.1B
Aircraft Price

$652M
Airframe Price

$102M x4
Engine Price

57
Aircraft Sold

KEY EVENTS & DATES

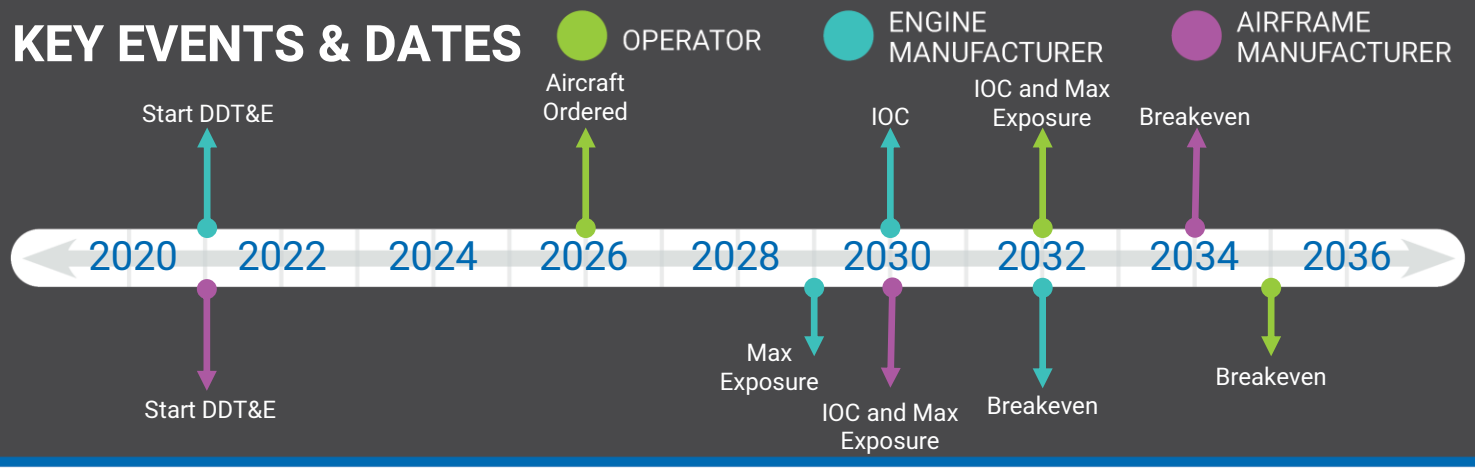

Business Results

OPERATOR

7%
ROIC (avg)

$723M
NPV

$3.3B
Max Exposure

ENGINE MANUFACTURER

17%
IRR

$731M
NPV

$6.4B
Max Exposure

AIRFRAME MANUFACTURER

17%
IRR

$1.5B
NPV

$13B
Max Exposure

BUSINESS CASE ANALYSIS

This aircraft is capturing 10 of 37 addressable routes that are within its design range which are exclusively Atlantic Ocean routes.

NASA SBIR Contract #80NSSC22C0008

LNG Matrix – Aircraft 10

ID: LNG.M5.P50.R4000.20230518

Mach 5
Cruise Speed

4,000 nmi
Max Range

50
Passenger Count

LNG
Fuel Type

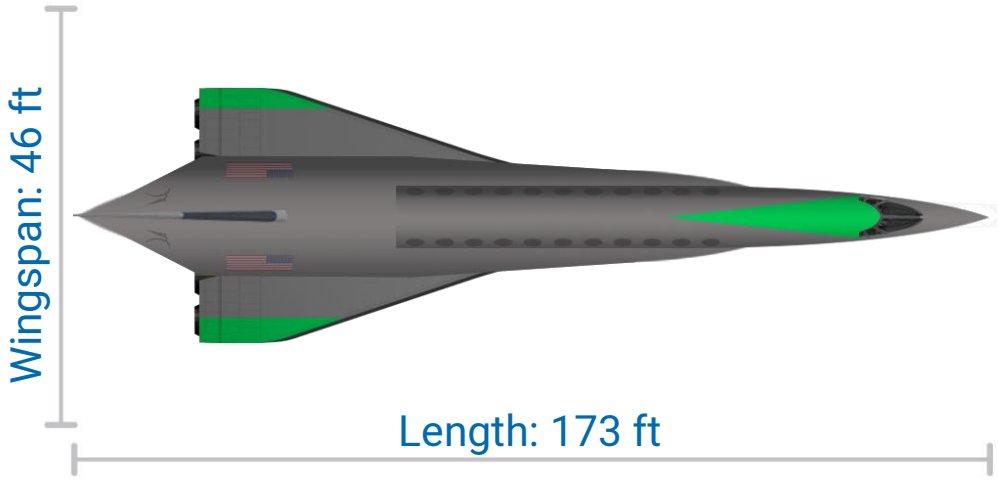

323,000 lbm MTOW	**131,900 lbm** MEW	**4 x 30,300 lbf** Engine Thrust SLS
2.1 hours Gate-to-Gate Time at Max Range	**95,100 ft** Cruise Altitude	**11,700 ft** Bal. Field Length SL

COST METRICS (FY21 USD)

DDT&E		TFU	
$11B Airframe	**$7.2B** Engine	**$165M** Airframe	**$50M** Engine

ENVIRONMENTAL METRICS

94 EPNdB Lateral Takeoff Noise	**0.62 kg/km/pax** Emissions (CO_2e)
102 PNLdB Sonic Boom	**0.22 kg/km/pax** Fuel Consumption Rate

AIRCRAFT NOTES

- Supersonic cruise condition L/D = 4.8
- Supersonic cruise condition Isp = 1500 s
- Vehicle propellant mass fraction (PMF) = 0.47
- Takeoff T/W = 0.375
- Effective Dose Rate (51° Lat.) = 8.1 μSv/hr

NASA SBIR Contract #80NSSC22C0008

LNG Matrix – Aircraft 10

ID: LNG.M5.P50.R4000.20230518

Key Inputs

Mach 5
Cruise Speed

4,000 nmi
Range

50
Passenger Count

LNG
Fuel Type

OPERATOR METRICS

$10,100-$11,400
Ticket Price

0.2M
Pax/Year

10
Routes Captured

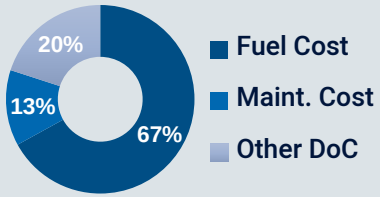

MANUFACTURER METRICS

$1.1B
Aircraft Price

$637M
Airframe Price

$121M x4
Engine Price

57
Aircraft Sold

KEY EVENTS & DATES

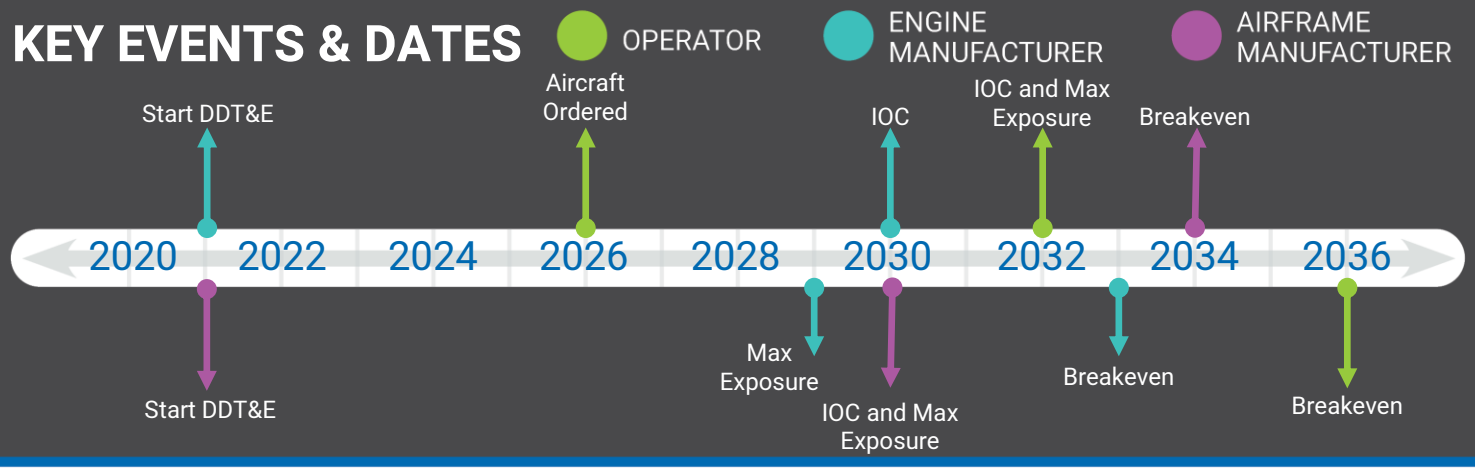

Business Results

OPERATOR

7%
ROIC (avg)

$754M
NPV

$3.6B
Max Exposure

ENGINE MANUFACTURER

16%
IRR

$582M
NPV

$7.8B
Max Exposure

AIRFRAME MANUFACTURER

16%
IRR

$1.1B
NPV

$15B
Max Exposure

BUSINESS CASE ANALYSIS

This aircraft is capturing 10 of 37 addressable routes that are within its design range which are exclusively Atlantic Ocean routes.

NASA SBIR Contract #80NSSC22C0008

LNG Matrix – Aircraft 11

ID: LNG.M1.5.P20.R6510.20230518

Mach 1.5
Cruise Speed

6,510 nmi
Max Range

20
Passenger Count

LNG
Fuel Type

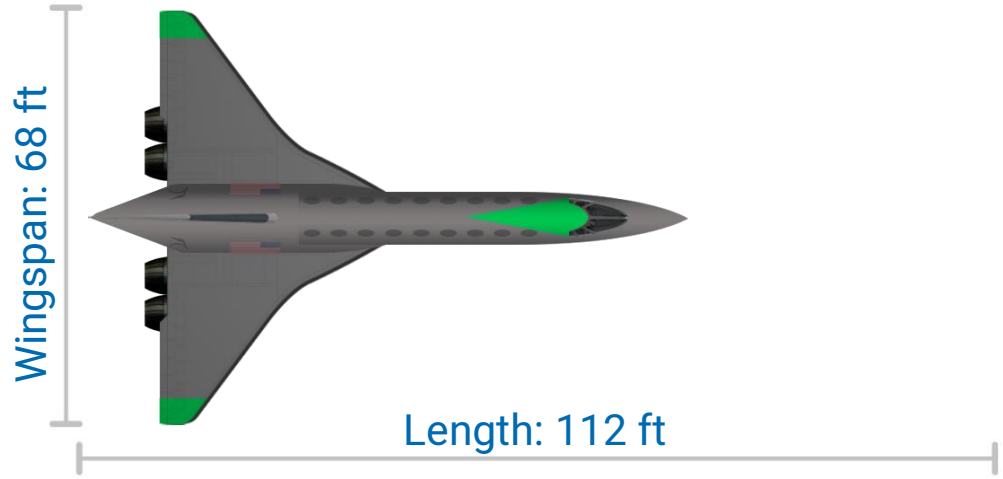

153,000 lbm
MTOW

61,500 lbm
MEW

4 x 14,300 lbf
Engine Thrust SLS

8.4 hours
Gate-to-Gate Time
at Max Range

44,400 ft
Cruise Altitude

6,400 ft
Bal. Field Length SL

COST METRICS (FY21 USD)

DDT&E

$6.5B Airframe

$2.9B Engine

TFU

$87M Airframe

$9.2M Engine

ENVIRONMENTAL METRICS

91 EPNdB
Lateral Takeoff Noise

105 PNLdB
Sonic Boom

0.45 kg/km/pax
Emissions (CO_2e)

0.16 kg/km/pax
Fuel Consumption Rate

AIRCRAFT NOTES

- Supersonic cruise condition L/D = 9
- Supersonic cruise condition Isp = 4609 s
- Vehicle propellant mass fraction (PMF) = 0.47
- Takeoff T/W = 0.375
- Effective Dose Rate (51° Lat.) = 6.4 μSv/hr

NASA SBIR Contract #80NSSC22C0008

LNG Matrix – Aircraft 11

SpaceWorks

NASA

ID: LNG.M1.5.P20.R6510.20230518

Key Inputs

Mach 1.5
Cruise Speed

6,510 nmi
Range

20
Passenger Count

LNG
Fuel Type

OPERATOR METRICS

$6,900-$9,200
Ticket Price

0.9M
Pax/Year

54
Routes Captured

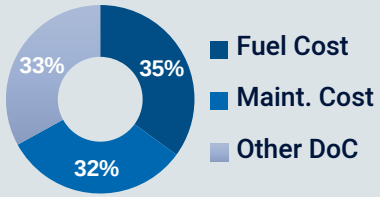

MANUFACTURER METRICS

$262M
Aircraft Price

$204M
Airframe Price

$14M x4
Engine Price

561
Aircraft Sold

KEY EVENTS & DATES

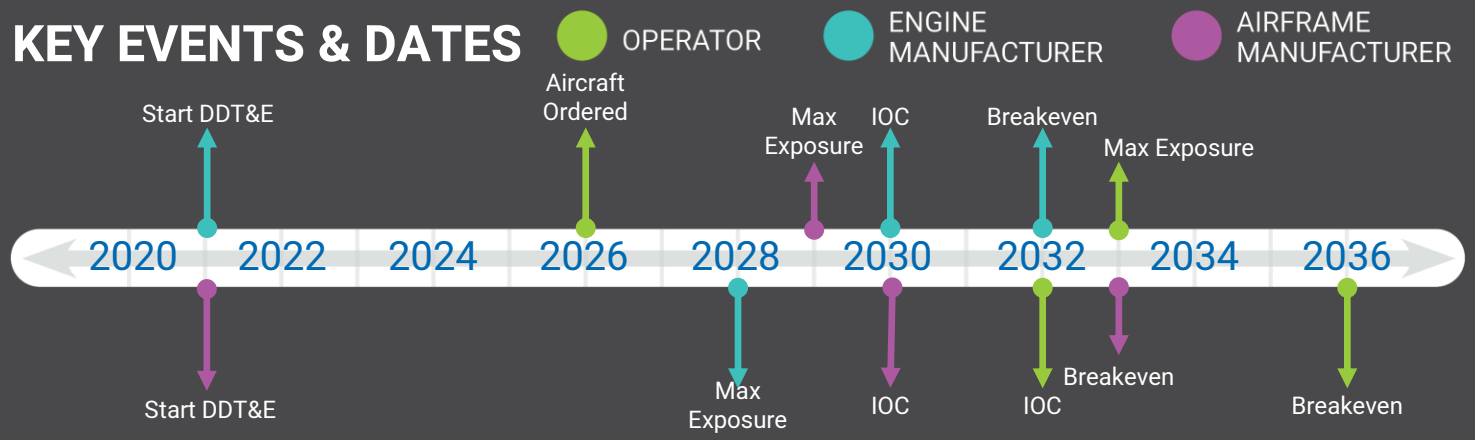

Business Results

OPERATOR

9%
ROIC (avg)

$2.5B
NPV

$7.5B
Max Exposure

ENGINE MANUFACTURER

22%
IRR

$953M
NPV

$2.1B
Max Exposure

AIRFRAME MANUFACTURER

22%
IRR

$3.2B
NPV

$6.8B
Max Exposure

BUSINESS CASE ANALYSIS

This aircraft is capturing 54 of 84 addressable routes that are within its design range which are a mix of Atlantic & Pacific Ocean routes.

NASA SBIR Contract #80NSSC22C0008

LNG Matrix – Aircraft 12

ID: LNG.M2.P20.R6100.20230518

Mach 2
Cruise Speed

6,100 nmi
Max Range

20
Passenger Count

LNG
Fuel Type

COST METRICS (FY21 USD)

DDT&E

$7.8B Airframe

$3.6B Engine

TFU

$109M Airframe

$15M Engine

ENVIRONMENTAL METRICS

92 EPNdB
Lateral Takeoff Noise

104 PNLdB
Sonic Boom

0.7 kg/km/pax
Emissions (CO2e)

0.24 kg/km/pax
Fuel Consumption Rate

207,000 lbm
MTOW

77,400 lbm
MEW

4 x 19,400 lbf
Engine Thrust SLS

6.2 hours
Gate-to-Gate Time
at Max Range

56,300 ft
Cruise Altitude

7,100 ft
Bal. Field Length SL

AIRCRAFT NOTES

- Supersonic cruise condition L/D = 7.5
- Supersonic cruise condition Isp = 3465 s
- Vehicle propellant mass fraction (PMF) = 0.47
- Takeoff T/W = 0.375
- Effective Dose Rate (51º Lat.) = 9.0 μSv/hr

NASA SBIR Contract #80NSSC22C0008

LNG Matrix – Aircraft 12

SpaceWorks

NASA

ID: LNG.M2.P20.R6100.20230518

Key Inputs

Mach 2
Cruise Speed

6,100 nmi
Range

20
Passenger Count

LNG
Fuel Type

OPERATOR METRICS

$8,800-$11,500
Ticket Price

0.6M
Pax/Year

44
Routes Captured

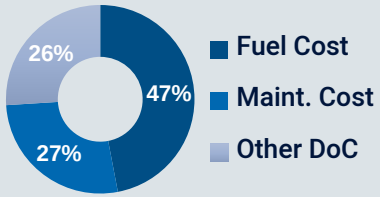

MANUFACTURER METRICS

$382M
Aircraft Price

$280M
Airframe Price

$25M x4
Engine Price

283
Aircraft Sold

KEY EVENTS & DATES

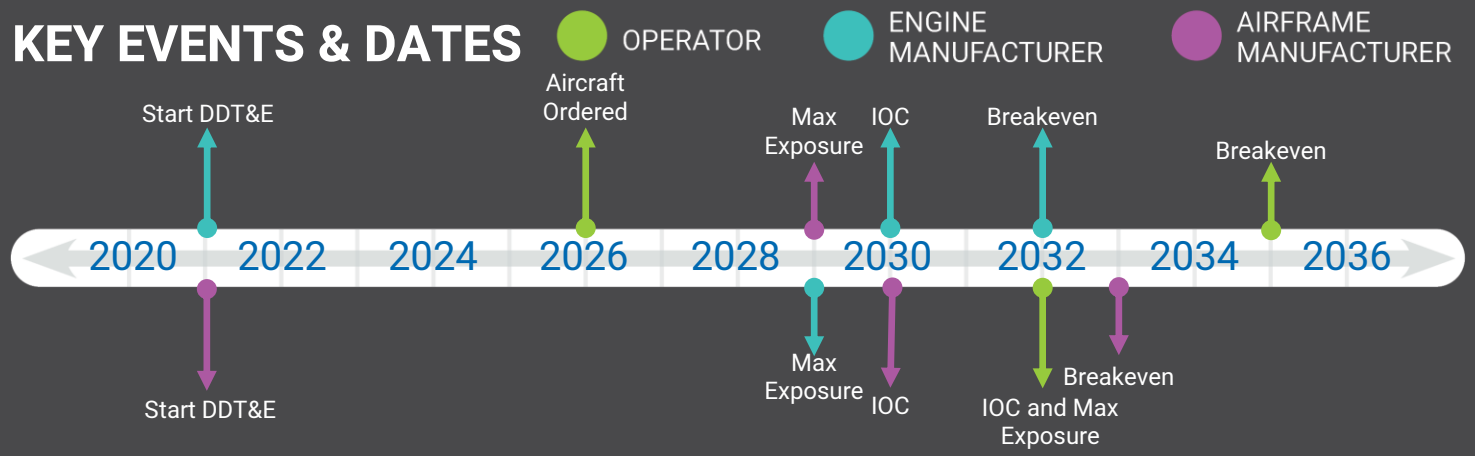

Business Results

OPERATOR

8%
ROIC (avg)

$2.3B
NPV

$6.5B
Max Exposure

ENGINE MANUFACTURER

19%
IRR

$767M
NPV

$3.1B
Max Exposure

AIRFRAME MANUFACTURER

19%
IRR

$2.2B
NPV

$8.6B
Max Exposure

BUSINESS CASE ANALYSIS

This aircraft is capturing 44 of 80 addressable routes that are within its design range which are a mix of Atlantic & Pacific Ocean routes.

NASA SBIR Contract #80NSSC22C0008

Preliminary results, subject to change

LNG Matrix – Aircraft 13

ID: LNG.M3.P20.R5700.20230518

Mach 3
Cruise Speed

5,700 nmi
Max Range

20
Passenger Count

LNG
Fuel Type

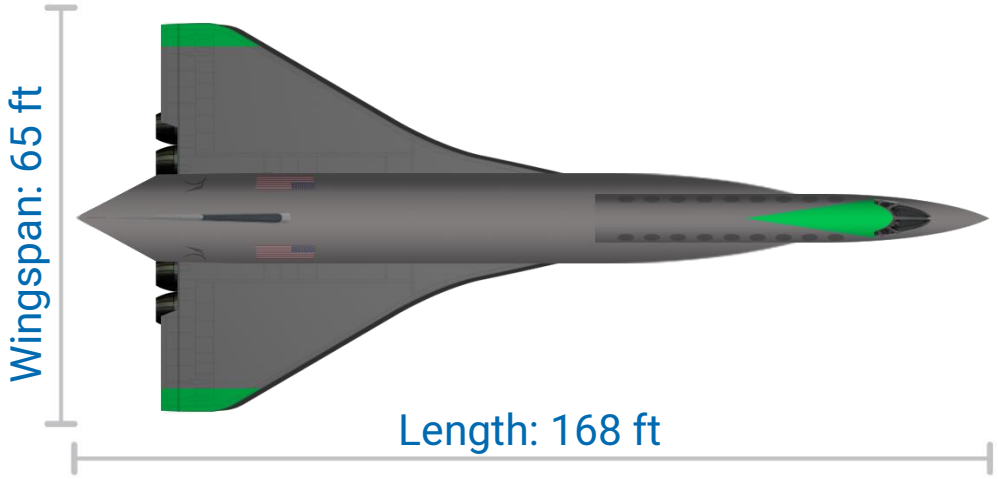

405,000 lbm MTOW	**137,900 lbm** MEW	**4 x 38,000 lbf** Engine Thrust SLS
4.1 hours Gate-to-Gate Time at Max Range	**73,300 ft** Cruise Altitude	**8,500 ft** Bal. Field Length SL

COST METRICS (FY21 USD)

DDT&E

$12B Airframe

$5.8B Engine

TFU

$182M Airframe

$39M Engine

ENVIRONMENTAL METRICS

95 EPNdB
Lateral Takeoff Noise

104 PNLdB
Sonic Boom

1.59 kg/km/pax
Emissions (CO_2e)

0.56 kg/km/pax
Fuel Consumption Rate

AIRCRAFT NOTES

- Supersonic cruise condition L/D = 6
- Supersonic cruise condition Isp = 2310 s
- Vehicle propellant mass fraction (PMF) = 0.47
- Takeoff T/W = 0.375
- Effective Dose Rate (51° Lat.) = 9.1 μSv/hr

NASA SBIR Contract #80NSSC22C0008

LNG Matrix – Aircraft 13

SpaceWorks

NASA

ID: LNG.M3.P20.R5700.20230518

Key Inputs

Mach 3
Cruise Speed

5,700 nmi
Range

20
Passenger Count

LNG
Fuel Type

OPERATOR METRICS

$11,800-$15,100
Ticket Price

0.3M
Pax/Year

28
Routes Captured

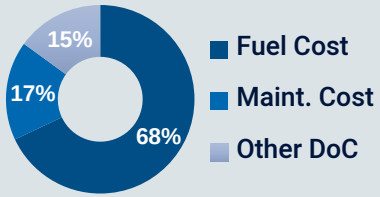

MANUFACTURER METRICS

$492M
Aircraft Price

$319M
Airframe Price

$43M x4
Engine Price

142
Aircraft Sold

KEY EVENTS & DATES

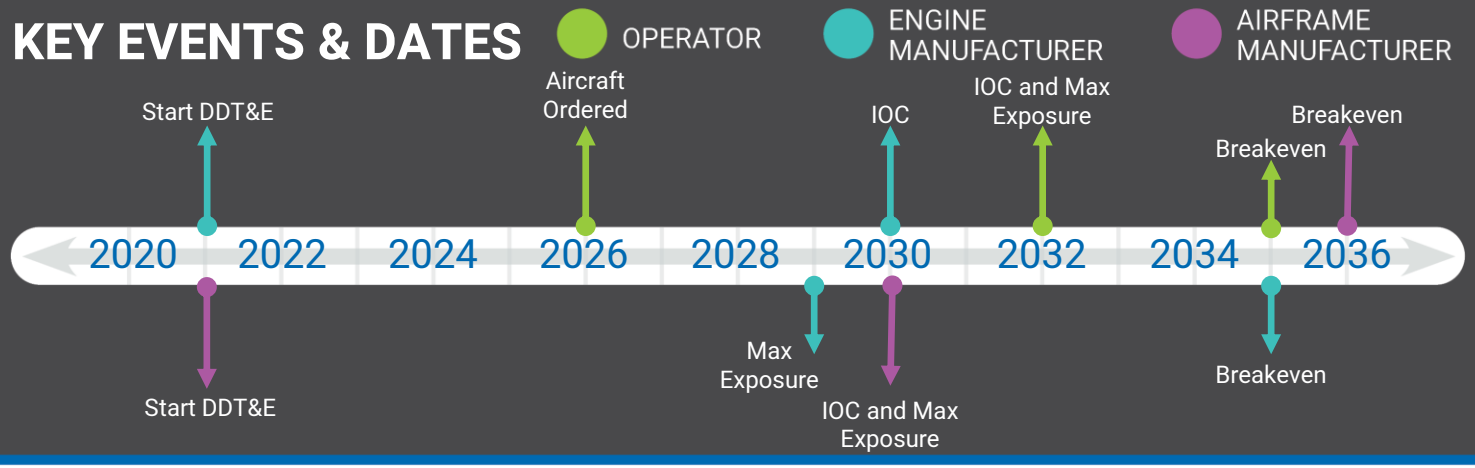

Business Results

OPERATOR

5%
ROIC (avg)

$1.3B
NPV

$4.5B
Max Exposure

ENGINE MANUFACTURER

11%
IRR

$-839M
NPV

$5.9B
Max Exposure

AIRFRAME MANUFACTURER

11%
IRR

$-2.1B
NPV

$15B
Max Exposure

BUSINESS CASE ANALYSIS

This aircraft is capturing 28 of 78 addressable routes that are within its design range which are a mix of Atlantic & Pacific Ocean routes.

NASA SBIR Contract #80NSSC22C0008

LNG Matrix – Aircraft 14

ID: LNG.M4.P20.R5400.20230518

Mach 4
Cruise Speed

5,400 nmi
Max Range

20
Passenger Count

LNG
Fuel Type

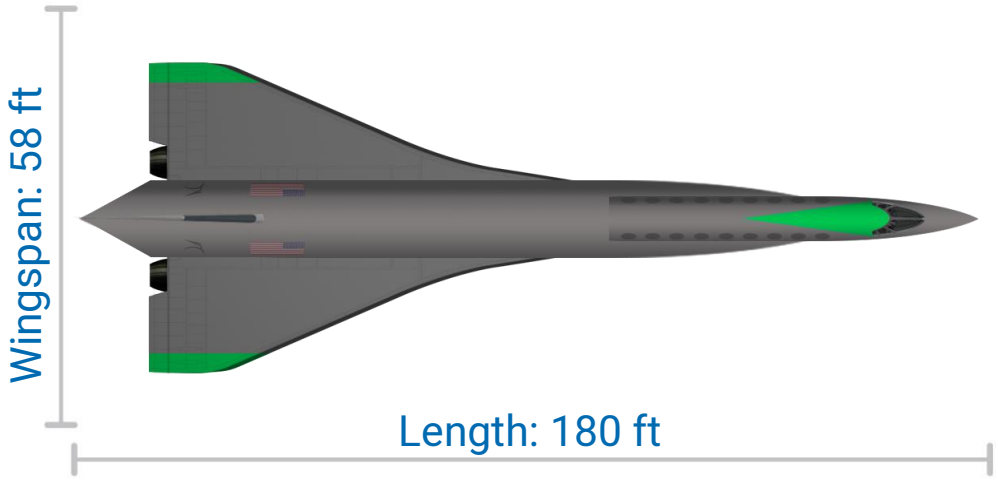

COST METRICS (FY21 USD)

DDT&E

$13B Airframe

$7.1B Engine

TFU

$203M Airframe

$57M Engine

ENVIRONMENTAL METRICS

96 EPNdB
Lateral Takeoff Noise

104 PNLdB
Sonic Boom

1.89 kg/km/pax
Emissions (CO2e)

0.66 kg/km/pax
Fuel Consumption Rate

457,000 lbm
MTOW

157,800 lbm
MEW

4 x 42,900 lbf
Engine Thrust SLS

3.1 hours
Gate-to-Gate Time
at Max Range

85,500 ft
Cruise Altitude

10,100 ft
Bal. Field Length SL

AIRCRAFT NOTES

- Supersonic cruise condition L/D = 5.2
- Supersonic cruise condition Isp = 1847 s
- Vehicle propellant mass fraction (PMF) = 0.47
- Takeoff T/W = 0.375
- Effective Dose Rate (51° Lat.) = 8.5 μSv/hr

NASA SBIR Contract #80NSSC22C0008

LNG Matrix – Aircraft 14

ID: LNG.M4.P20.R5400.20230518

Key Inputs

Mach 4
Cruise Speed

5,400 nmi
Range

20
Passenger Count

LNG
Fuel Type

OPERATOR METRICS

$19,700-$24,700
Ticket Price

0.1M
Pax/Year

9
Routes Captured

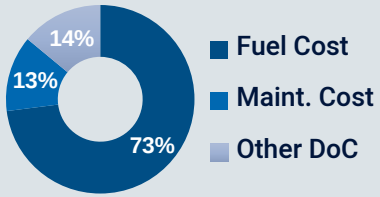

MANUFACTURER METRICS

$693M
Aircraft Price

$382M
Airframe Price

$78M x4
Engine Price

50
Aircraft Sold

KEY EVENTS & DATES

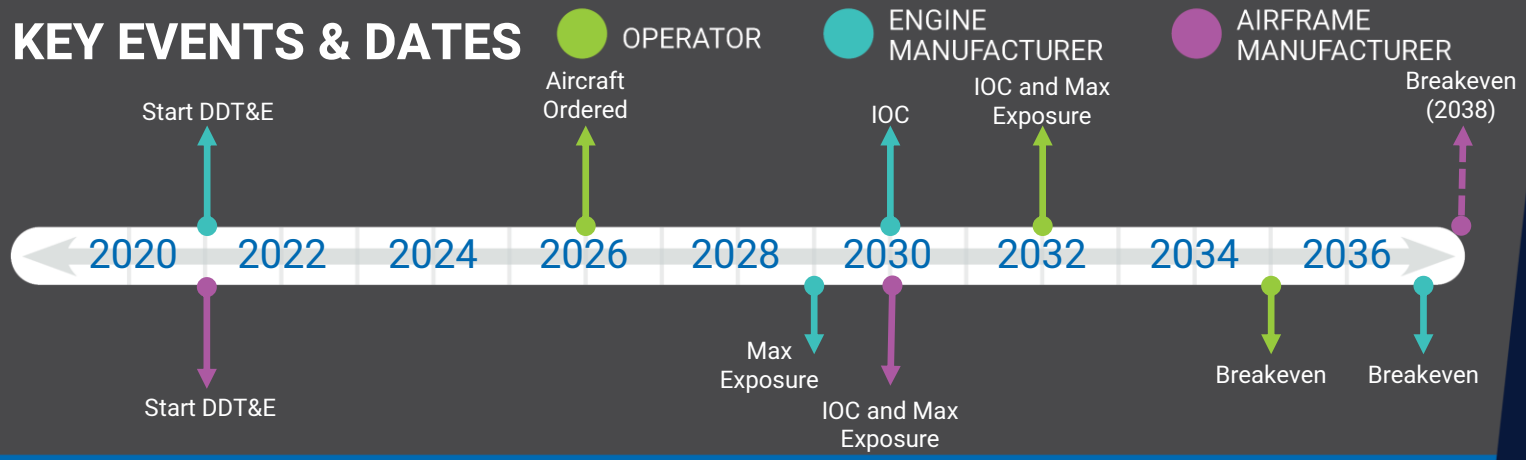

Business Results

OPERATOR

4%
ROIC (avg)

$452M
NPV

$1.8B
Max Exposure

ENGINE MANUFACTURER

8%
IRR

$-1.8B
NPV

$8.2B
Max Exposure

AIRFRAME MANUFACTURER

8%
IRR

$-3.7B
NPV

$18B
Max Exposure

BUSINESS CASE ANALYSIS

This aircraft is capturing 9 of 72 addressable routes that are within its design range which are a mix of Atlantic & Pacific Ocean routes.

NASA SBIR Contract #80NSSC22C0008

LNG Matrix – Aircraft 15

ID: LNG.M5.P20.R5000.20230518

Mach 5
Cruise Speed

5,000 nmi
Max Range

20
Passenger Count

LNG
Fuel Type

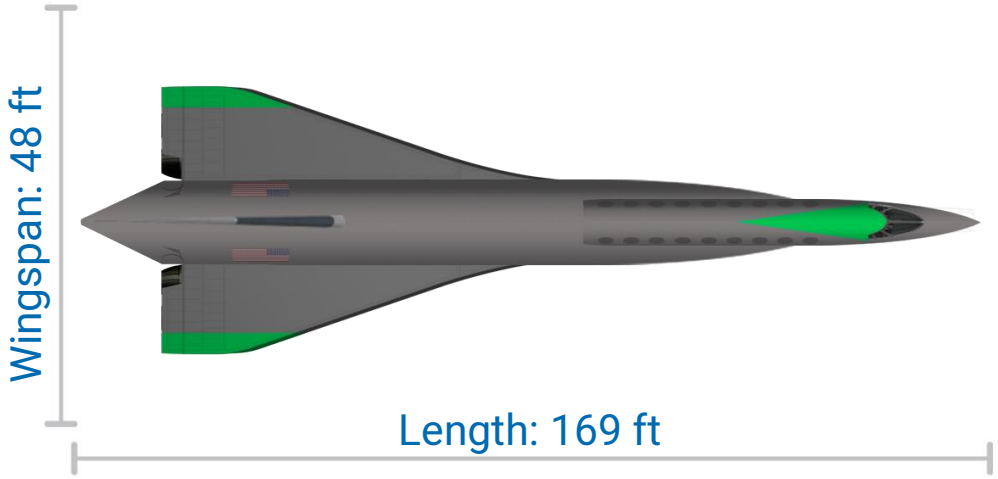

COST METRICS (FY21 USD)

DDT&E

$12B Airframe

$7.9B Engine

TFU

$187M Airframe

$63M Engine

ENVIRONMENTAL METRICS

95 EPNdB
Lateral Takeoff Noise

103 PNLdB
Sonic Boom

1.76 kg/km/pax
Emissions (CO_2e)

0.62 kg/km/pax
Fuel Consumption Rate

406,000 lbm
MTOW

147,300 lbm
MEW

4 x 38,100 lbf
Engine Thrust SLS

2.4 hours
Gate-to-Gate Time
at Max Range

95,100 ft
Cruise Altitude

11,700 ft
Bal. Field Length SL

AIRCRAFT NOTES

- Supersonic cruise condition L/D = 4.8
- Supersonic cruise condition Isp = 1500 s
- Vehicle propellant mass fraction (PMF) = 0.47
- Takeoff T/W = 0.375
- Effective Dose Rate (51° Lat.) = 8.1 μSv/hr

NASA SBIR Contract #80NSSC22C0008

LNG Matrix – Aircraft 15

SpaceWorks

NASA

ID: LNG.M5.P20.R5000.20230518

Key Inputs

Mach 5
Cruise Speed

5,000 nmi
Range

20
Passenger Count

LNG
Fuel Type

OPERATOR METRICS

$19,500-$23,900
Ticket Price

0.1M
Pax/Year

9
Routes Captured

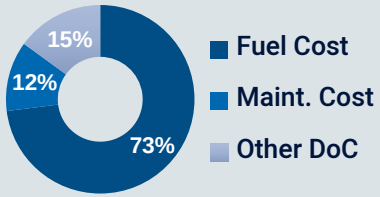

MANUFACTURER METRICS

$763M
Aircraft Price

$386M
Airframe Price

$94M x4
Engine Price

50
Aircraft Sold

KEY EVENTS & DATES

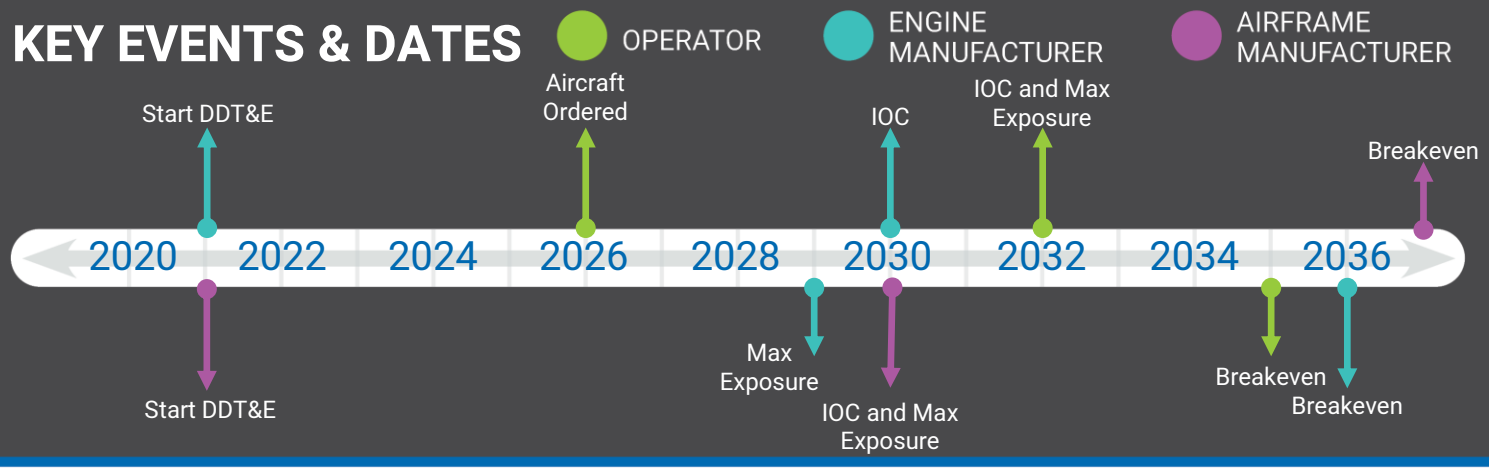

Business Results

OPERATOR

4%
ROIC (avg)

$505M
NPV

$2.1B
Max Exposure

ENGINE MANUFACTURER

10%
IRR

$-1.5B
NPV

$9.0B
Max Exposure

AIRFRAME MANUFACTURER

10%
IRR

$-2.8B
NPV

$17B
Max Exposure

BUSINESS CASE ANALYSIS

This aircraft is capturing 9 of 66 addressable routes that are within its design range which are a mix of Atlantic & Pacific Ocean routes.

NASA SBIR Contract #80NSSC22C0008

LNG Matrix – Aircraft 16

ID: LNG.M1.5.P50.R6510.20230518

Mach 1.5
Cruise Speed

6,510 nmi
Max Range

50
Passenger Count

LNG
Fuel Type

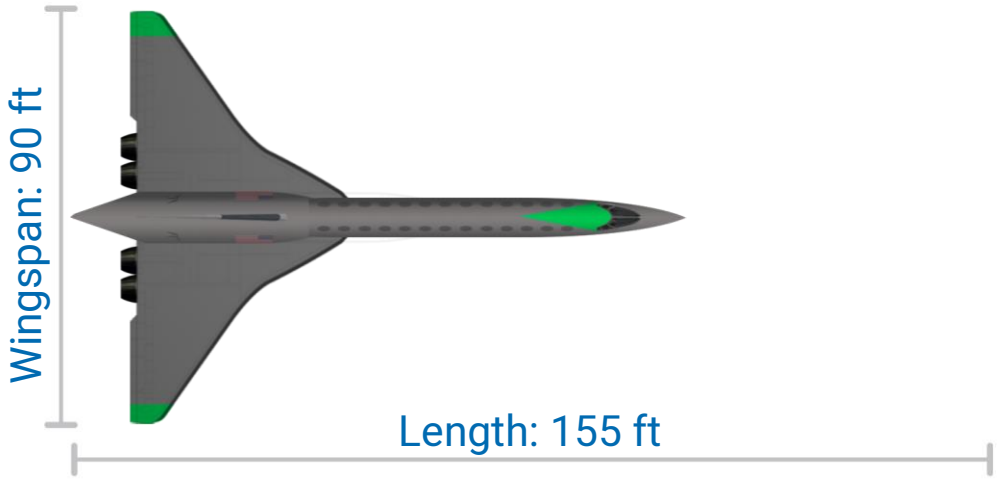

COST METRICS (FY21 USD)

DDT&E

$9.6B Airframe

$3.6B Engine

TFU

$138M Airframe

$16M Engine

ENVIRONMENTAL METRICS

93 EPNdB
Lateral Takeoff Noise

107 PNLdB
Sonic Boom

0.32 kg/km/pax
Emissions (CO_2e)

0.11 kg/km/pax
Fuel Consumption Rate

269,000 lbm
MTOW

105,600 lbm
MEW

4 x 25,200 lbf
Engine Thrust SLS

8.4 hours
Gate-to-Gate Time
at Max Range

44,400 ft
Cruise Altitude

6,400 ft
Bal. Field Length SL

AIRCRAFT NOTES

- Supersonic cruise condition L/D = 9
- Supersonic cruise condition Isp = 4609 s
- Vehicle propellant mass fraction (PMF) = 0.47
- Takeoff T/W = 0.375
- Effective Dose Rate (51° Lat.) = 6.4 μSv/hr

NASA SBIR Contract #80NSSC22C0008

LNG Matrix – Aircraft 16

SpaceWorks

NASA

ID: LNG.M1.5.P50.R6510.20230518

Key Inputs

Mach 1.5
Cruise Speed

6,510 nmi
Range

50
Passenger Count

LNG
Fuel Type

OPERATOR METRICS

$7,200-$9,700
Ticket Price

0.6M
Pax/Year

27
Routes Captured

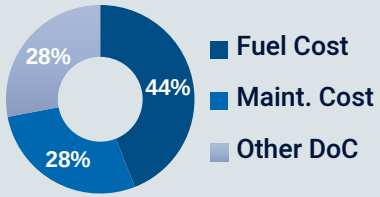

MANUFACTURER METRICS

$639M
Aircraft Price

$488M
Airframe Price

$38M x4
Engine Price

169
Aircraft Sold

KEY EVENTS & DATES

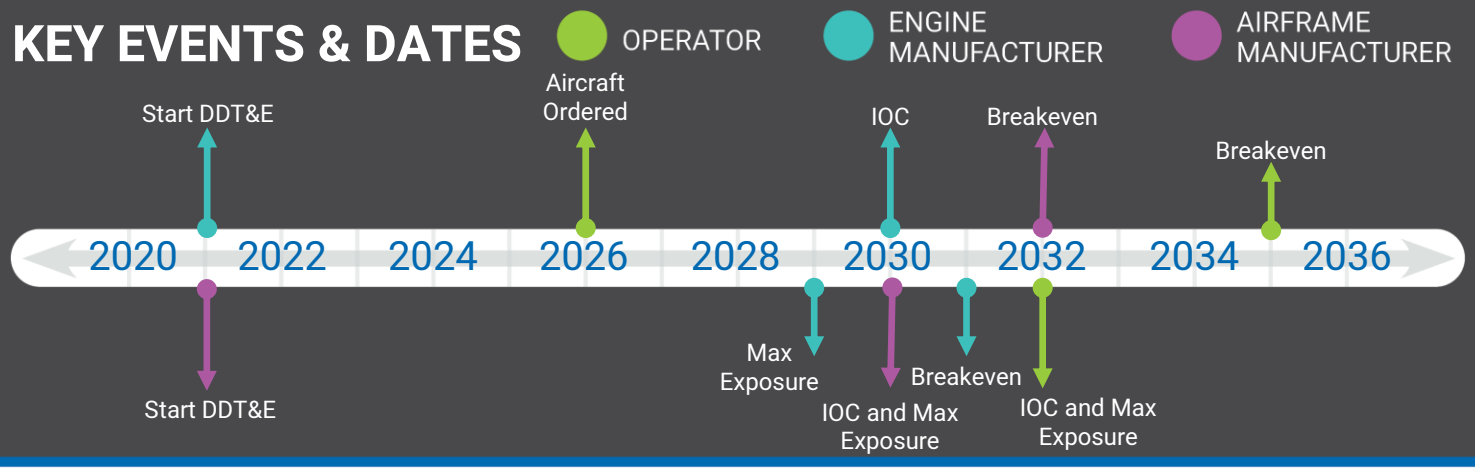

Business Results

OPERATOR

9%
ROIC (avg)

$1.8B
NPV

$6.7B
Max Exposure

ENGINE MANUFACTURER

22%
IRR

$1.2B
NPV

$3.2B
Max Exposure

AIRFRAME MANUFACTURER

22%
IRR

$4.1B
NPV

$10B
Max Exposure

BUSINESS CASE ANALYSIS

This aircraft is capturing 27 of 84 addressable routes that are within its design range which are a mix of Atlantic & Pacific Ocean routes.

NASA SBIR Contract #80NSSC22C0008

LNG Matrix – Aircraft 17

ID: LNG.M2.P50.R6100.20230518

Mach 2
Cruise Speed

6,100 nmi
Max Range

50
Passenger Count

LNG
Fuel Type

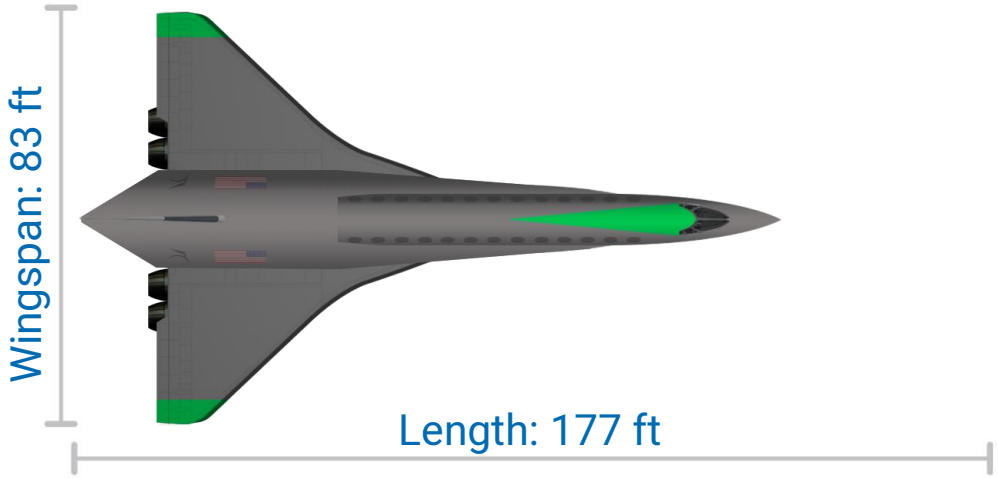

COST METRICS (FY21 USD)

DDT&E

$12B Airframe

$4.5B Engine

TFU

$174M Airframe

$26M Engine

ENVIRONMENTAL METRICS

95 EPNdB
Lateral Takeoff Noise

106 PNLdB
Sonic Boom

0.49 kg/km/pax
Emissions (CO2e)

0.17 kg/km/pax
Fuel Consumption Rate

364,000 lbm
MTOW

133,800 lbm
MEW

4 x 34,100 lbf
Engine Thrust SLS

6.2 hours
Gate-to-Gate Time
at Max Range

56,300 ft
Cruise Altitude

7,100 ft
Bal. Field Length SL

AIRCRAFT NOTES

- Supersonic cruise condition L/D = 7.5
- Supersonic cruise condition Isp = 3465 s
- Vehicle propellant mass fraction (PMF) = 0.47
- Takeoff T/W = 0.375
- Effective Dose Rate (51º Lat.) = 9.0 μSv/hr

NASA SBIR Contract #80NSSC22C0008

LNG Matrix – Aircraft 17

SpaceWorks

NASA

ID: LNG.M2.P50.R6100.20230518

Key Inputs

Mach 2
Cruise Speed

6,100 nmi
Range

50
Passenger Count

LNG
Fuel Type

OPERATOR METRICS

$6,500-$8,500
Ticket Price

0.8M
Pax/Year

28
Routes Captured

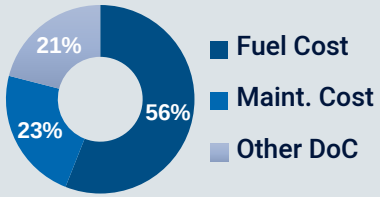

MANUFACTURER METRICS

$667M
Aircraft Price

$492M
Airframe Price

$44M x4
Engine Price

161
Aircraft Sold

KEY EVENTS & DATES

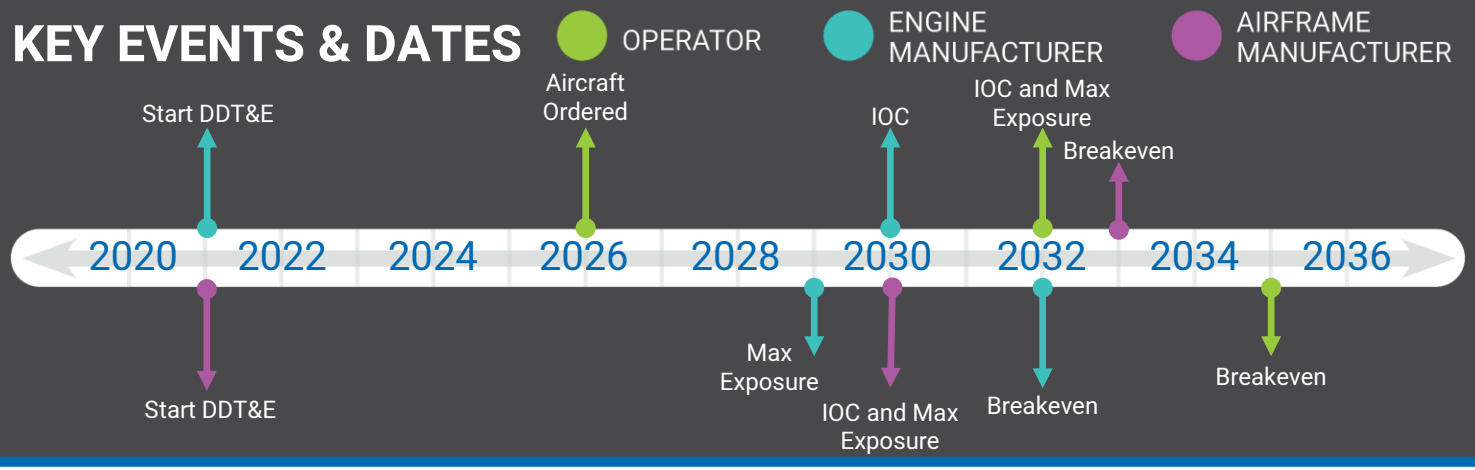

Business Results

OPERATOR

9%
ROIC (avg)

$1.8B
NPV

$6.8B
Max Exposure

ENGINE MANUFACTURER

18%
IRR

$670M
NPV

$4.3B
Max Exposure

AIRFRAME MANUFACTURER

21%
IRR

$2.1B
NPV

$13B
Max Exposure

BUSINESS CASE ANALYSIS

This aircraft is capturing 28 of 80 addressable routes that are within its design range which are a mix of Atlantic & Pacific Ocean routes.

NASA SBIR Contract #80NSSC22C0008

LNG Matrix – Aircraft 18

ID: LNG.M3.P50.R5700.20230518

Mach 3
Cruise Speed

5,700 nmi
Max Range

50
Passenger Count

LNG
Fuel Type

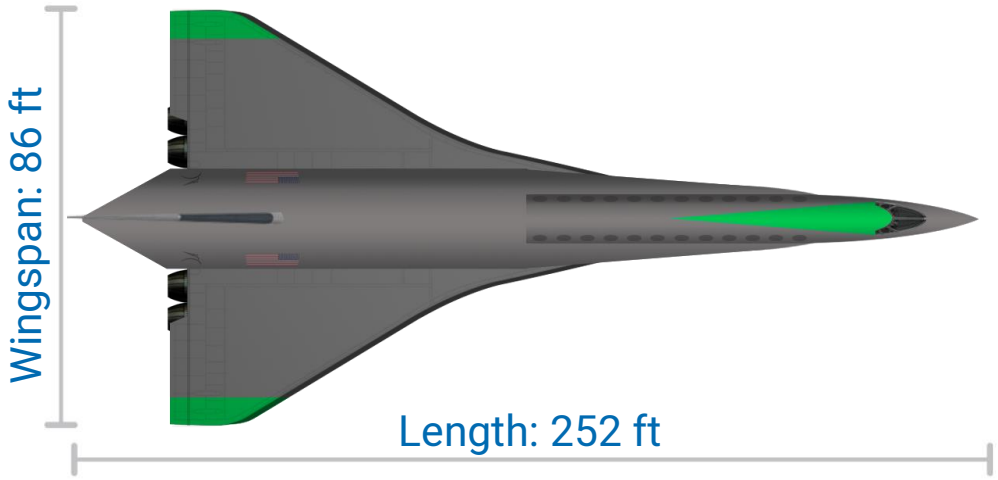

COST METRICS (FY21 USD)

DDT&E

$19B Airframe

$7.2B Engine

TFU

$300M Airframe

$68M Engine

ENVIRONMENTAL METRICS

99 EPNdB
Lateral Takeoff Noise

106 PNLdB
Sonic Boom

1.11 kg/km/pax
Emissions (CO2e)

0.39 kg/km/pax
Fuel Consumption Rate

709,000 lbm
MTOW

239,300 lbm
MEW

4 x 66,500 lbf
Engine Thrust SLS

4.1 hours
Gate-to-Gate Time
at Max Range

73,300 ft
Cruise Altitude

8,500 ft
Bal. Field Length SL

AIRCRAFT NOTES

- Supersonic cruise condition L/D = 6
- Supersonic cruise condition Isp = 2310 s
- Vehicle propellant mass fraction (PMF) = 0.47
- Takeoff T/W = 0.375
- Effective Dose Rate (51º Lat.) = 9.1 μSv/hr

NASA SBIR Contract #80NSSC22C0008

LNG Matrix – Aircraft 18

SpaceWorks

NASA

ID: LNG.M3.P50.R5700.20230518

Key Inputs

Mach 3
Cruise Speed

5,700 nmi
Range

50
Passenger Count

LNG
Fuel Type

OPERATOR METRICS

$11,400-$14,600
Ticket Price

0.2M
Pax/Year

10
Routes Captured

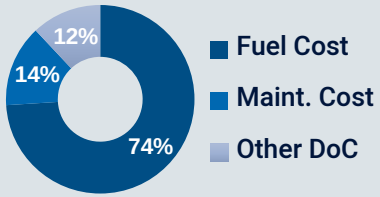

MANUFACTURER METRICS

$937M
Aircraft Price

$602M
Airframe Price

$84M x4
Engine Price

54
Aircraft Sold

KEY EVENTS & DATES

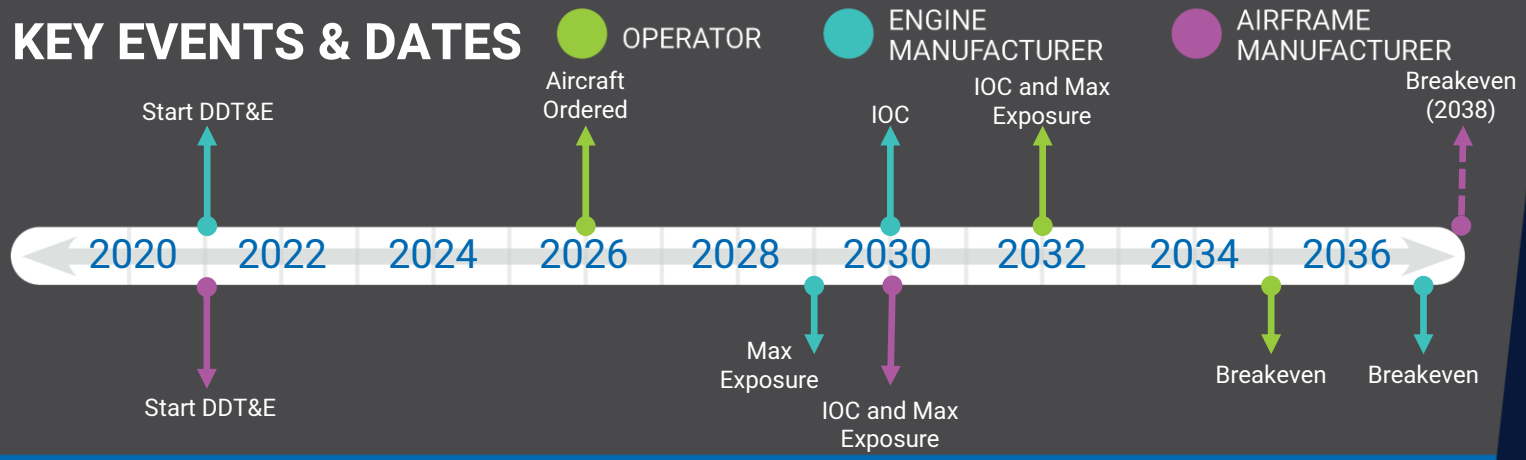

Business Results

OPERATOR

4%
ROIC (avg)

$736M
NPV

$2.6B
Max Exposure

ENGINE MANUFACTURER

9%
IRR

$-1.7B
NPV

$8.3B
Max Exposure

AIRFRAME MANUFACTURER

9%
IRR

$-4.9B
NPV

$24B
Max Exposure

BUSINESS CASE ANALYSIS

This aircraft is capturing 10 of 78 addressable routes that are within its design range which are a mix of Atlantic & Pacific Ocean routes.

NASA SBIR Contract #80NSSC22C0008

LNG Matrix – Aircraft 19

ID: LNG.M4.P50.R5400.20230518

Mach 4
Cruise Speed

5,400 nmi
Max Range

50
Passenger Count

LNG
Fuel Type

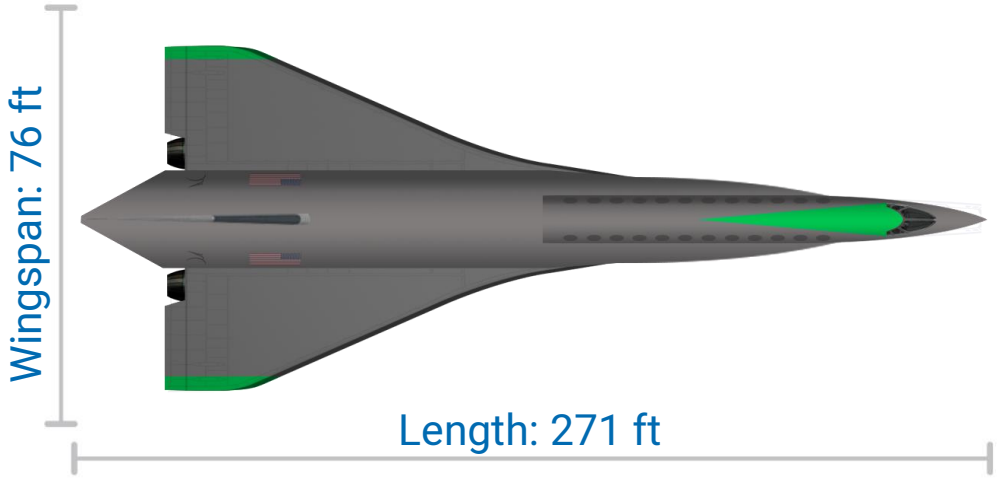

COST METRICS (FY21 USD)

DDT&E

$20B Airframe

$9.0B Engine

TFU

$331M Airframe

$99M Engine

ENVIRONMENTAL METRICS

100 EPNdB
Lateral Takeoff Noise

105 PNLdB
Sonic Boom

1.31 kg/km/pax
Emissions (CO2e)

0.46 kg/km/pax
Fuel Consumption Rate

795,000 lbm
MTOW

272,100 lbm
MEW

4 x 74,500 lbf
Engine Thrust SLS

3.1 hours
Gate-to-Gate Time
at Max Range

85,500 ft
Cruise Altitude

10,100 ft
Bal. Field Length SL

AIRCRAFT NOTES

- Supersonic cruise condition L/D = 5.2
- Supersonic cruise condition Isp = 1847 s
- Vehicle propellant mass fraction (PMF) = 0.47
- Takeoff T/W = 0.375
- Effective Dose Rate (51º Lat.) = 8.5 μSv/hr

NASA SBIR Contract #80NSSC22C0008

LNG Matrix – Aircraft 19

SpaceWorks

NASA

ID: LNG.M4.P50.R5400.20230518

Key Inputs

Mach 4
Cruise Speed

5,400 nmi
Range

50
Passenger Count

LNG
Fuel Type

OPERATOR METRICS

$11,900-$15,000
Ticket Price

0.2M
Pax/Year

8
Routes Captured

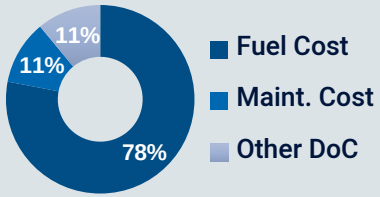

MANUFACTURER METRICS

$1.0B
Aircraft Price

$565M
Airframe Price

$109M x4
Engine Price

45
Aircraft Sold

KEY EVENTS & DATES

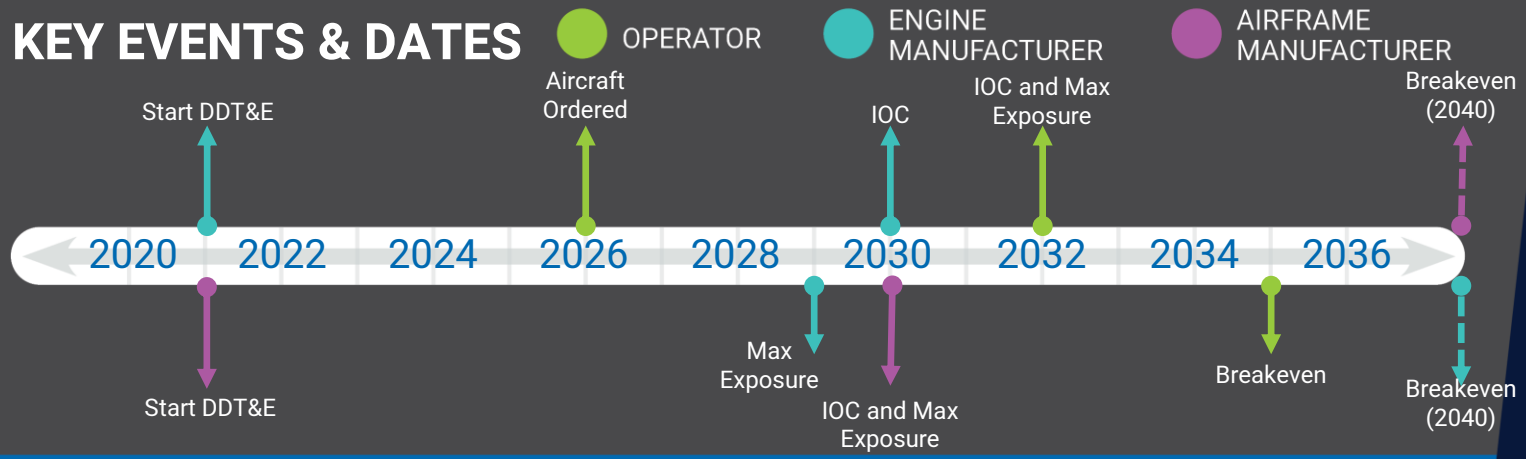

Business Results

OPERATOR

0%
ROIC (avg)

$469M
NPV

$2.4B
Max Exposure

ENGINE MANUFACTURER

6%
IRR

$-2.8B
NPV

$10B
Max Exposure

AIRFRAME MANUFACTURER

7%
IRR

$-6.7B
NPV

$26B
Max Exposure

BUSINESS CASE ANALYSIS

This aircraft is capturing 8 of 72 addressable routes that are within its design range which are a mix of Atlantic & Pacific Ocean routes.

NASA SBIR Contract #80NSSC22C0008

LNG Matrix – Aircraft 20

ID: LNG.M5.P50.R5000.20230518

Mach 5
Cruise Speed

5,000 nmi
Max Range

50
Passenger Count

LNG
Fuel Type

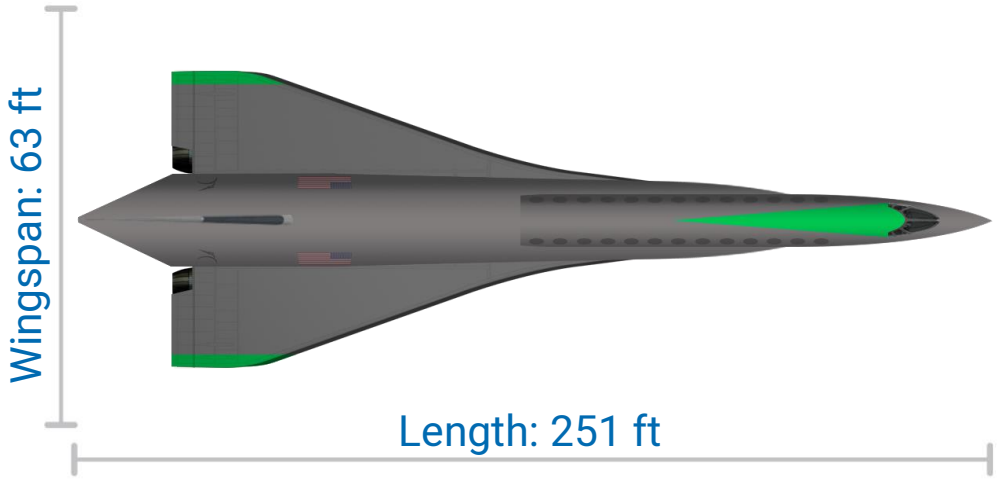

COST METRICS (FY21 USD)

DDT&E

$18B Airframe

$9.9B Engine

TFU

$298M Airframe

$109M Engine

ENVIRONMENTAL METRICS

99 EPNdB
Lateral Takeoff Noise

104 PNLdB
Sonic Boom

1.21 kg/km/pax
Emissions (CO_2e)

0.43 kg/km/pax
Fuel Consumption Rate

700,000 lbm
MTOW

251,600 lbm
MEW

4 x 65,700 lbf
Engine Thrust SLS

2.4 hours
Gate-to-Gate Time
at Max Range

95,100 ft
Cruise Altitude

11,700 ft
Bal. Field Length SL

AIRCRAFT NOTES

- Supersonic cruise condition L/D = 4.8
- Supersonic cruise condition Isp = 1500 s
- Vehicle propellant mass fraction (PMF) = 0.47
- Takeoff T/W = 0.375
- Effective Dose Rate (51° Lat.) = 8.1 μSv/hr

NASA SBIR Contract #80NSSC22C0008

LNG Matrix – Aircraft 20

ID: LNG.M5.P50.R5000.20230518

Key Inputs

Mach 5
Cruise Speed

5,000 nmi
Range

50
Passenger Count

LNG
Fuel Type

OPERATOR METRICS

$13,100-$16,000
Ticket Price

0.1M
Pax/Year

8
Routes Captured

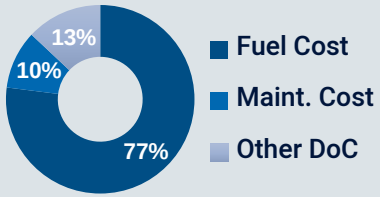

MANUFACTURER METRICS

$978M
Aircraft Price

$489M
Airframe Price

$122M x4
Engine Price

48
Aircraft Sold

KEY EVENTS & DATES

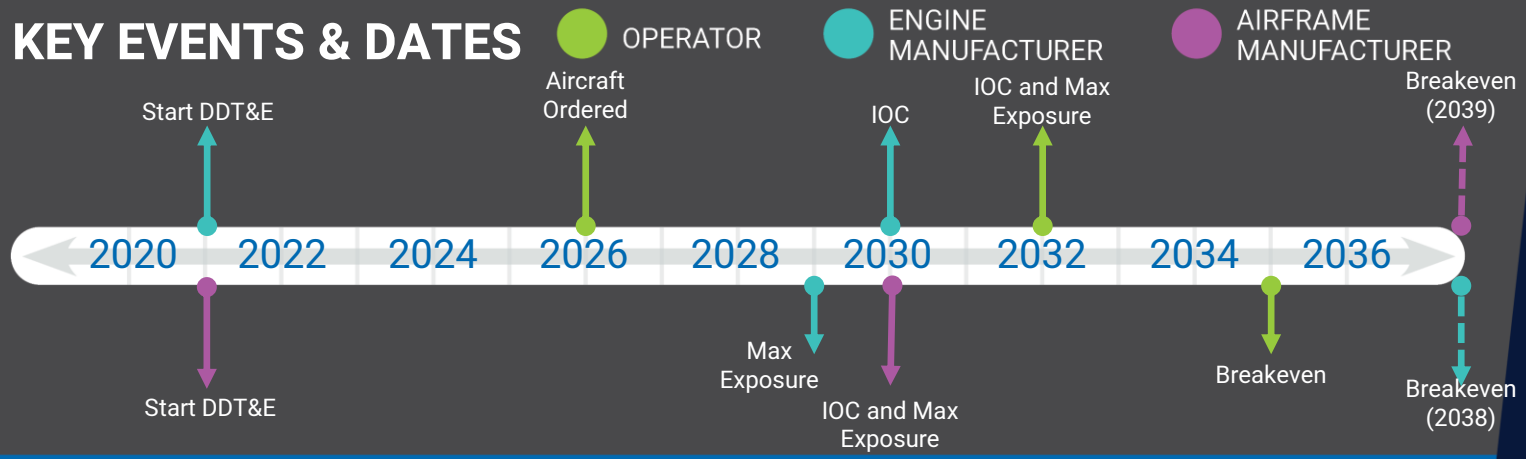

Business Results

OPERATOR

3%
ROIC (avg)

$474M
NPV

$2.5B
Max Exposure

ENGINE MANUFACTURER

8%
IRR

$-2.7B
NPV

$11B
Max Exposure

AIRFRAME MANUFACTURER

8%
IRR

$-5.6B
NPV

$24B
Max Exposure

BUSINESS CASE ANALYSIS

This aircraft is capturing 8 of 66 addressable routes that are within its design range which are a mix of Atlantic & Pacific Ocean routes.

NASA SBIR Contract #80NSSC22C0008

LH2 Aircraft

- Cost Metrics and Financials updated with latest Market Data

NASA SBIR Contract #80NSSC22C0008

LH2 Matrix – Aircraft 1

ID: LH2.M1.5.P20.R4000.20230518

Mach 1.5
Cruise Speed

4,000 nmi
Max Range

20
Passenger Count

LH2
Fuel Type

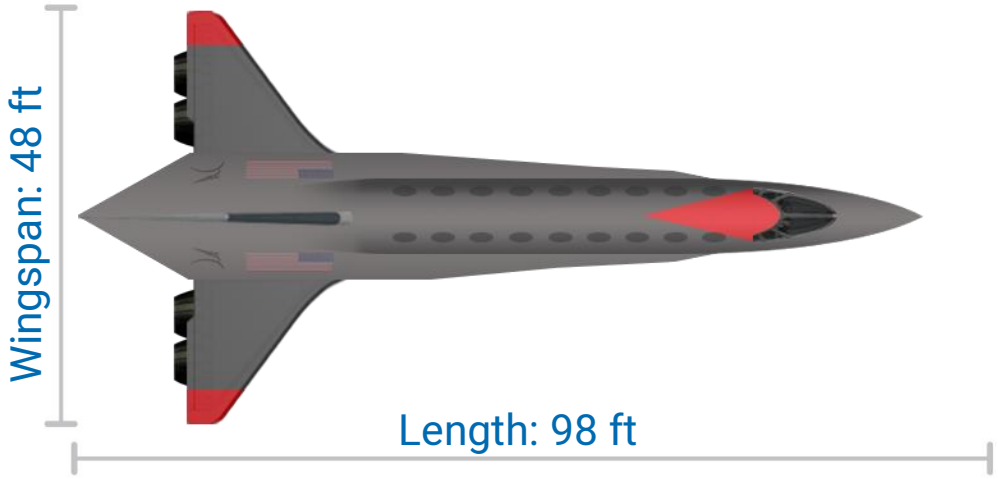

COST METRICS (FY21 USD)

DDT&E

$4.8B Airframe

$2.6B Engine

TFU

$62M Airframe

$4.3M Engine

ENVIRONMENTAL METRICS

89 EPNdB
Lateral Takeoff Noise

104 PNLdB
Sonic Boom

0 kg/km/pax
Emissions (CO_2e)

0.05 kg/km/pax
Fuel Consumption Rate

69,000 lbm
MTOW

45,100 lbm
MEW

4 x 6,500 lbf
Engine Thrust SLS

5.5 hours
Gate-to-Gate Time
at Max Range

44,400 ft
Cruise Altitude

7,400 ft
Bal. Field Length SL

AIRCRAFT NOTES

- Supersonic cruise condition L/D = 8
- Supersonic cruise condition Isp = 9577 s
- Vehicle propellant mass fraction (PMF) = 0.47
- Takeoff T/W = 0.375
- Effective Dose Rate (51° Lat.) = 6.4 μSv/hr

NASA SBIR Contract #80NSSC22C0008

LH2 Matrix – Aircraft 1

SpaceWorks

NASA

ID: LH2.M1.5.P20.R4000.20230518

Key Inputs

Mach 1.5
Cruise Speed

4,000 nmi
Range

20
Passenger Count

LH2
Fuel Type

OPERATOR METRICS

$8,600-$9,600
Ticket Price

0.2M
Pax/Year

16
Routes Captured

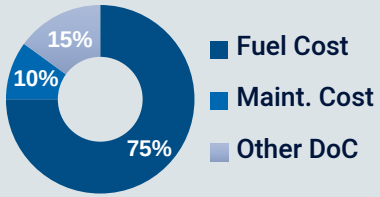

MANUFACTURER METRICS

$199M
Aircraft Price

$140M
Airframe Price

$15M x4
Engine Price

183
Aircraft Sold

KEY EVENTS & DATES

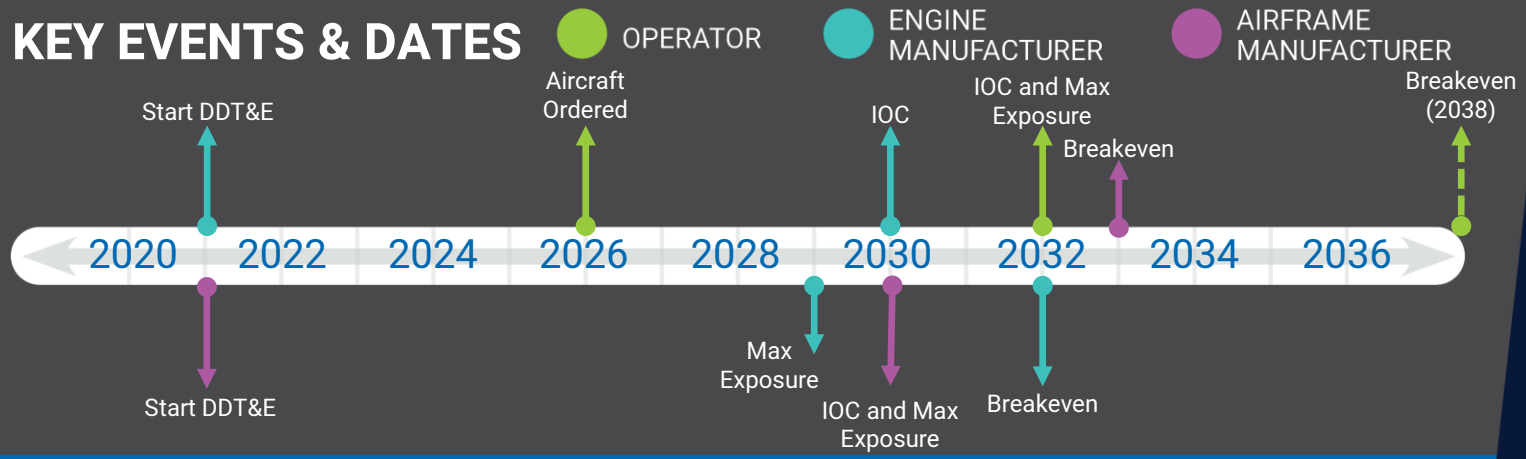

Business Results

OPERATOR

14%
ROIC (avg)

$156M
NPV

$1.5B
Max Exposure

ENGINE MANUFACTURER

16%
IRR

$219M
NPV

$2.8B
Max Exposure

AIRFRAME MANUFACTURER

16%
IRR

$494M
NPV

$6.1B
Max Exposure

BUSINESS CASE ANALYSIS

This aircraft is capturing 16 of 37 addressable routes that are within its design range which are exclusively Atlantic Ocean routes.

NASA SBIR Contract #80NSSC22C0008

LH2 Matrix – Aircraft 2

ID: LH2.M2.P20.R4000.20230518

Mach 2
Cruise Speed

4,000 nmi
Max Range

20
Passenger Count

LH2
Fuel Type

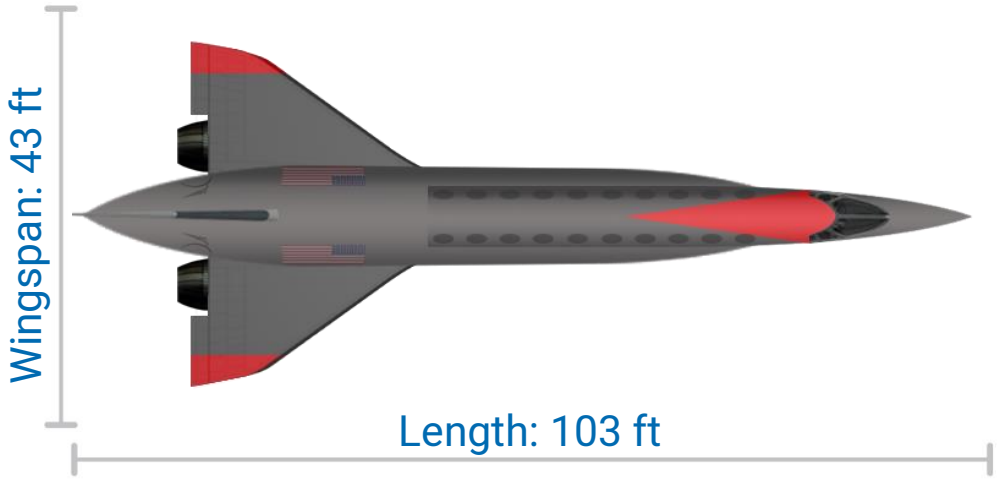

COST METRICS (FY21 USD)

DDT&E

$5.4B Airframe

$3.1B Engine

TFU

$71M Airframe

$6.2M Engine

ENVIRONMENTAL METRICS

89 EPNdB
Lateral Takeoff Noise

103 PNLdB
Sonic Boom

0 kg/km/pax
Emissions (CO_2e)

0.07 kg/km/pax
Fuel Consumption Rate

84,000 lbm
MTOW

53,000 lbm
MEW

4 x 7,800 lbf
Engine Thrust SLS

4.4 hours
Gate-to-Gate Time
at Max Range

56,300 ft
Cruise Altitude

8,300 ft
Bal. Field Length SL

AIRCRAFT NOTES

- Supersonic cruise condition L/D = 6.7
- Supersonic cruise condition Isp = 7200 s
- Vehicle propellant mass fraction (PMF) = 0.47
- Takeoff T/W = 0.375
- Effective Dose Rate (51° Lat.) = 9.0 μSv/hr

NASA SBIR Contract #80NSSC22C0008

LH2 Matrix – Aircraft 2

SpaceWorks

NASA

ID: LH2.M2.P20.R4000.20230518

Key Inputs

Mach 2
Cruise Speed

4,000 nmi
Range

20
Passenger Count

LH2
Fuel Type

OPERATOR METRICS

$9,200-$10,300
Ticket Price

0.2M
Pax/Year

15
Routes Captured

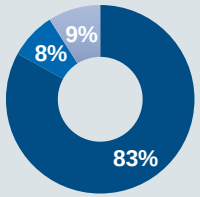

MANUFACTURER METRICS

$210M
Aircraft Price

$142M
Airframe Price

$17M x4
Engine Price

167
Aircraft Sold

KEY EVENTS & DATES

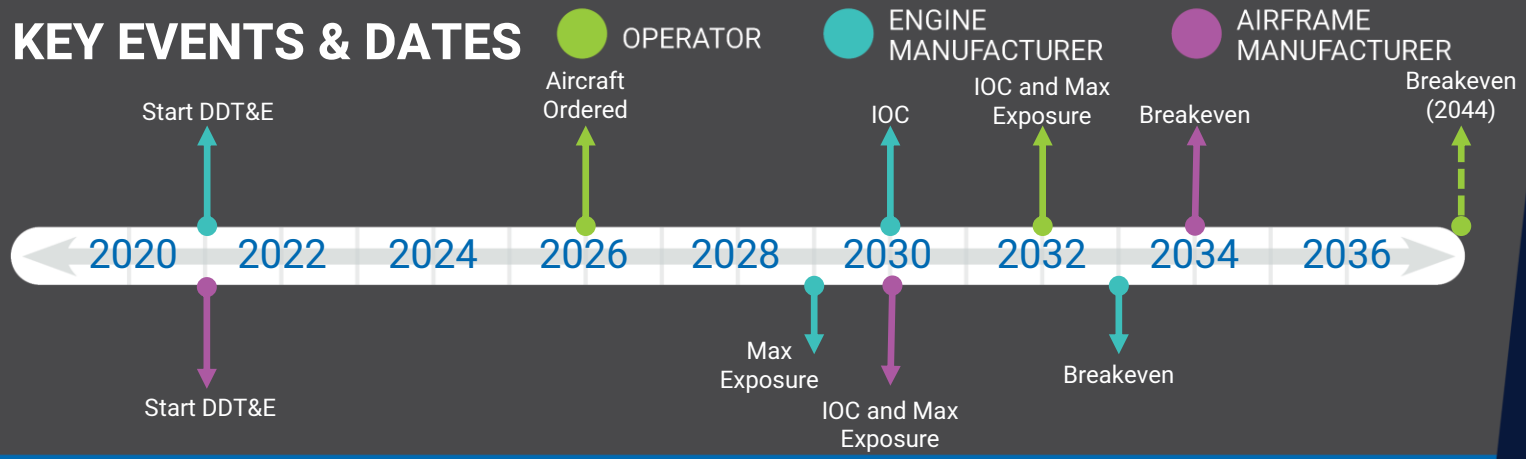

Business Results

OPERATOR

16%
ROIC (avg)

$31M
NPV

$1.2B
Max Exposure

ENGINE MANUFACTURER

14%
IRR

$-54.5M
NPV

$3.4B
Max Exposure

AIRFRAME MANUFACTURER

14%
IRR

$-114M
NPV

$7.0B
Max Exposure

BUSINESS CASE ANALYSIS

This aircraft is capturing 15 of 37 addressable routes that are within its design range which are exclusively Atlantic Ocean routes.

NASA SBIR Contract #80NSSC22C0008

LH2 Matrix – Aircraft 3

ID: LH2.M3.P20.R4000.20230518

Mach 3
Cruise Speed

4,000 nmi
Max Range

20
Passenger Count

LH2
Fuel Type

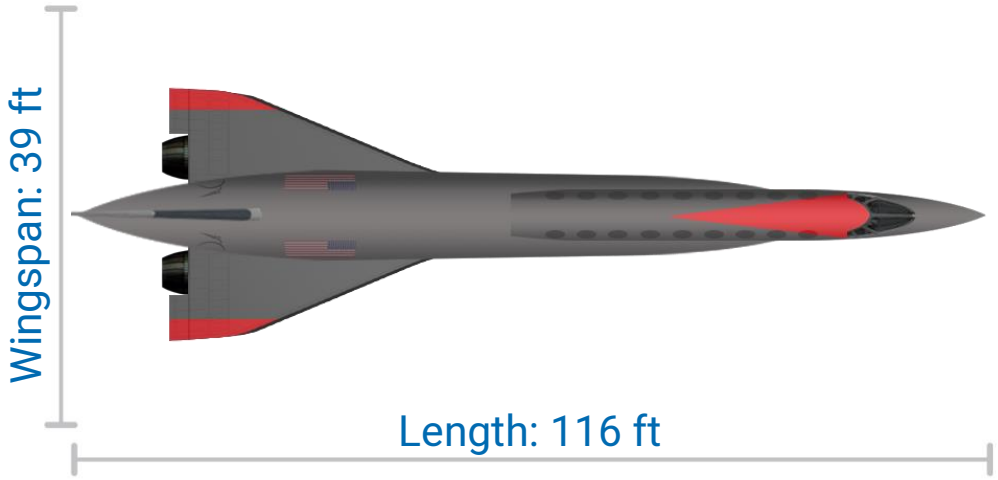

119,000 lbm
MTOW

73,200 lbm
MEW

4 x 11,200 lbf
Engine Thrust SLS

3.1 hours
Gate-to-Gate Time
at Max Range

73,300 ft
Cruise Altitude

10,200 ft
Bal. Field Length SL

COST METRICS (FY21 USD)

DDT&E

$6.7B Airframe

$4.3B Engine

TFU

$93M Airframe

$12M Engine

ENVIRONMENTAL METRICS

90 EPNdB
Lateral Takeoff Noise

102 PNLdB
Sonic Boom

0 kg/km/pax
Emissions (CO_2e)

0.12 kg/km/pax
Fuel Consumption Rate

AIRCRAFT NOTES

- Supersonic cruise condition L/D = 5.3
- Supersonic cruise condition Isp = 4799 s
- Vehicle propellant mass fraction (PMF) = 0.47
- Takeoff T/W = 0.375
- Effective Dose Rate (51° Lat.) = 9.1 μSv/hr

NASA SBIR Contract #80NSSC22C0008

LH2 Matrix – Aircraft 3

SpaceWorks

NASA

ID: LH2.M3.P20.R4000.20230518

Key Inputs

Mach 3
Cruise Speed

4,000 nmi
Range

20
Passenger Count

LH2
Fuel Type

OPERATOR METRICS

$12,800-$14,400
Ticket Price

0.1M
Pax/Year

12
Routes Captured

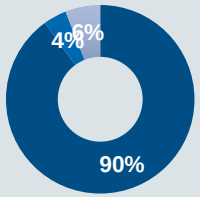

MANUFACTURER METRICS

$173M
Aircraft Price

$106M
Airframe Price

$17M x4
Engine Price

150
Aircraft Sold

KEY EVENTS & DATES

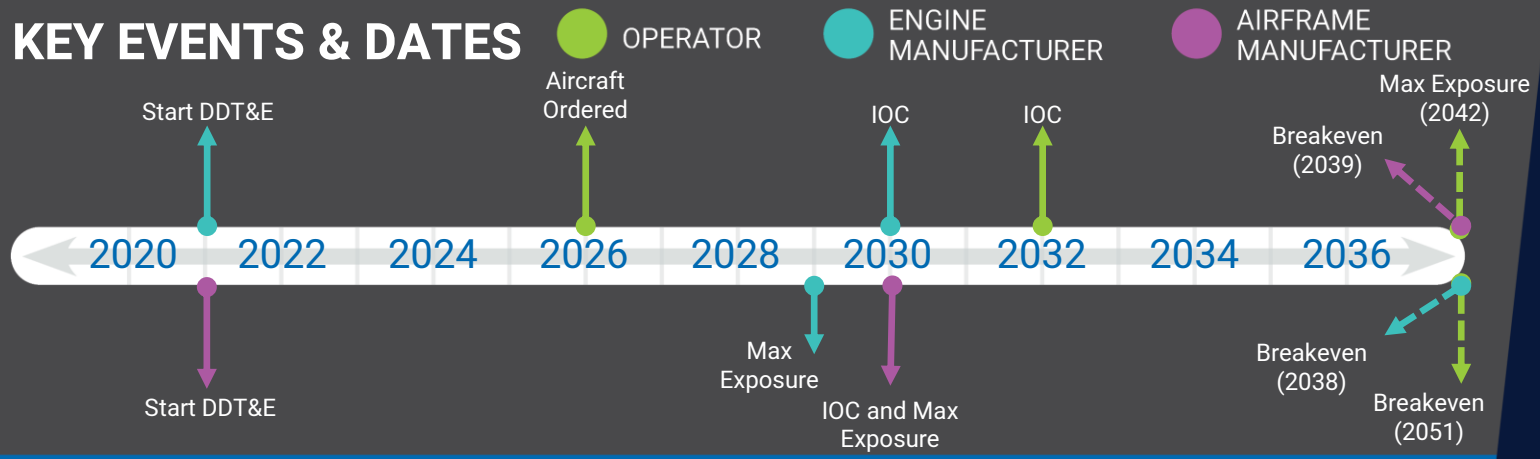

Business Results

OPERATOR

5%
ROIC (avg)

$-143M
NPV

$2.0B
Max Exposure

ENGINE MANUFACTURER

7%
IRR

$-1.2B
NPV

$5.1B
Max Exposure

AIRFRAME MANUFACTURER

7%
IRR

$-2.2B
NPV

$9.1B
Max Exposure

BUSINESS CASE ANALYSIS

This aircraft is capturing 12 of 37 addressable routes that are within its design range which are exclusively Atlantic Ocean routes.

NASA SBIR Contract #80NSSC22C0008

LH2 Matrix – Aircraft 4

ID: LH2.M4.P20.R4000.20230518

Mach 4
Cruise Speed

4,000 nmi
Max Range

20
Passenger Count

LH2
Fuel Type

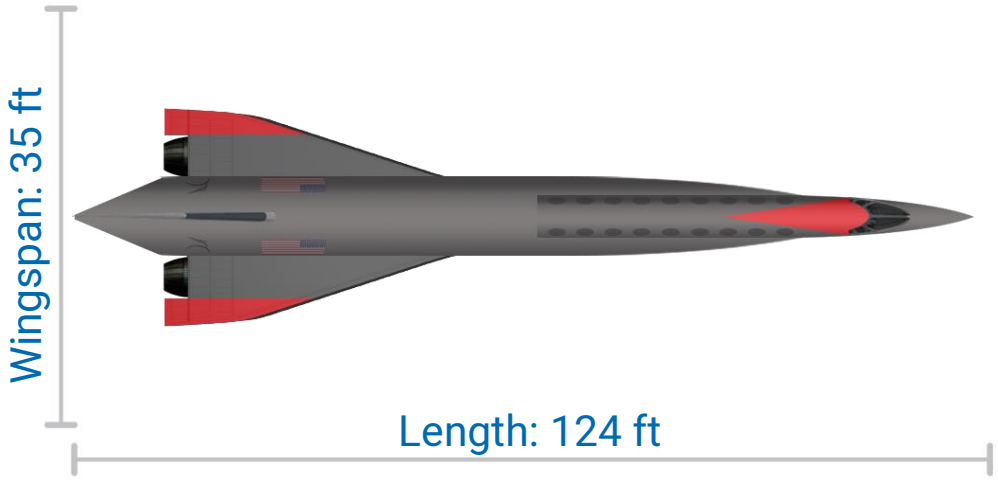

141,000 lbm MTOW	**86,600 lbm** MEW	**4 x 13,200 lbf** Engine Thrust SLS
2.5 hours Gate-to-Gate Time at Max Range	**85,500 ft** Cruise Altitude	**12,500 ft** Bal. Field Length SL

COST METRICS (FY21 USD)

DDT&E

$7.5B Airframe

$5.4B Engine

TFU

$107M Airframe

$18M Engine

ENVIRONMENTAL METRICS

91 EPNdB
Lateral Takeoff Noise

101 PNLdB
Sonic Boom

0 kg/km/pax
Emissions (CO_2e)

0.15 kg/km/pax
Fuel Consumption Rate

AIRCRAFT NOTES

- Supersonic cruise condition L/D = 4.7
- Supersonic cruise condition Isp = 3839 s
- Vehicle propellant mass fraction (PMF) = 0.47
- Takeoff T/W = 0.375
- Effective Dose Rate (51° Lat.) = 8.5 μSv/hr

NASA SBIR Contract #80NSSC22C0008

LH2 Matrix – Aircraft 4

SpaceWorks

NASA

ID: LH2.M4.P20.R4000.20230518

Key Inputs

Mach 4
Cruise Speed

4,000 nmi
Range

20
Passenger Count

LH2
Fuel Type

OPERATOR METRICS

$16,100-$18,100
Ticket Price

0.0M
Pax/Year

6
Routes Captured

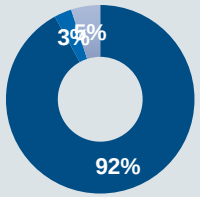

MANUFACTURER METRICS

$180M
Aircraft Price

$107M
Airframe Price

$18M x4
Engine Price

127
Aircraft Sold

KEY EVENTS & DATES

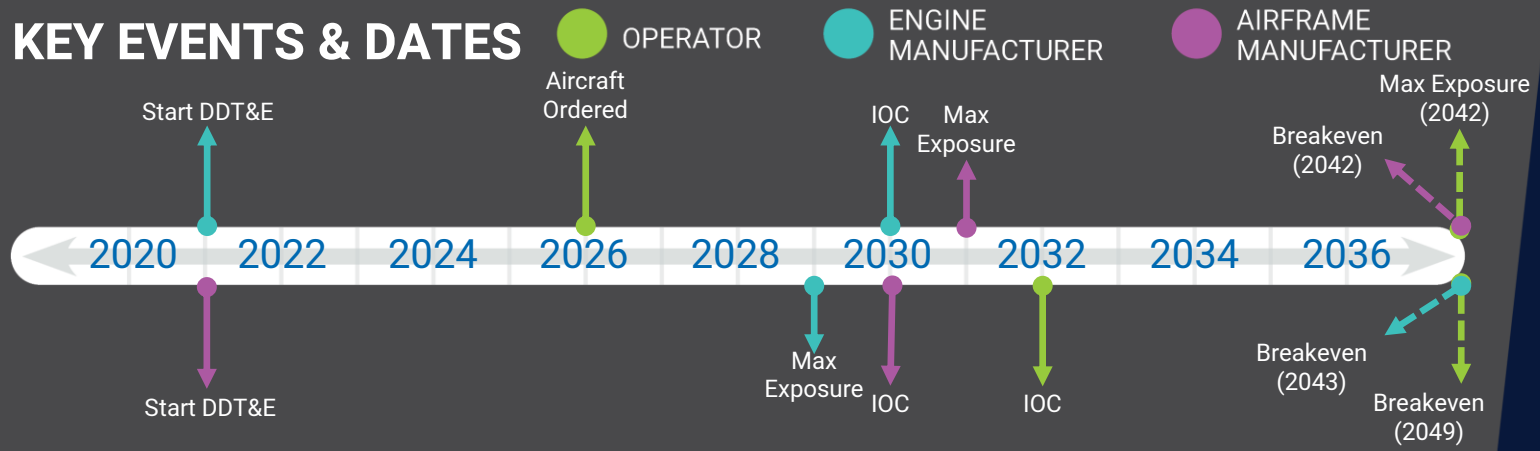

Business Results

OPERATOR

-20%
ROIC (avg)

$-66.0M
NPV

$946M
Max Exposure

ENGINE MANUFACTURER

3%
IRR

$-2.1B
NPV

$6.6B
Max Exposure

AIRFRAME MANUFACTURER

5%
IRR

$-3.0B
NPV

$11B
Max Exposure

BUSINESS CASE ANALYSIS

This aircraft is capturing 6 of 37 addressable routes that are within its design range which are exclusively Atlantic Ocean routes.

NASA SBIR Contract #80NSSC22C0008

LH2 Matrix – Aircraft 5

ID: LH2.M5.P20.R4000.20230518

Mach 5
Cruise Speed

4,000 nmi
Max Range

20
Passenger Count

LH2
Fuel Type

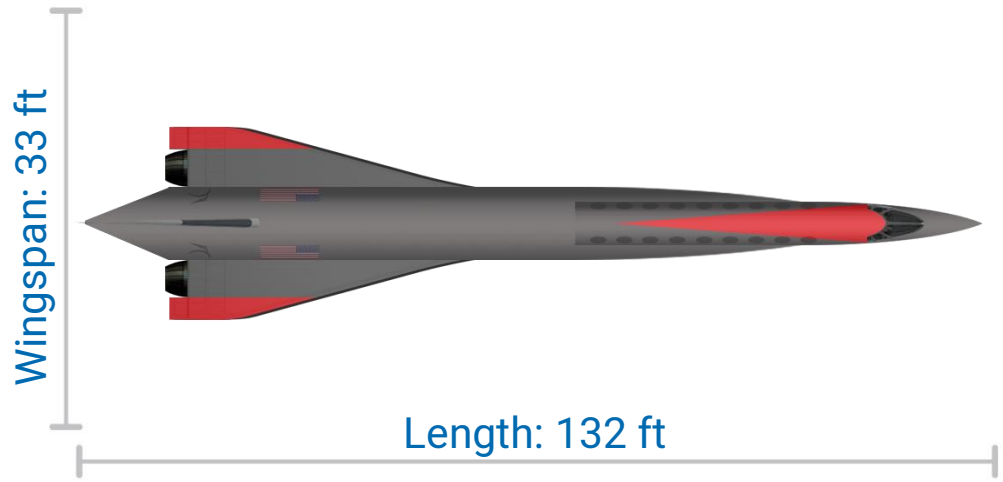

166,000 lbm
MTOW

102,300 lbm
MEW

4 x 15,500 lbf
Engine Thrust SLS

2.1 hours
Gate-to-Gate Time
at Max Range

95,100 ft
Cruise Altitude

15,200 ft
Bal. Field Length SL

COST METRICS (FY21 USD)

DDT&E

$8.4B Airframe

$6.7B Engine

TFU

$122M Airframe

$27M Engine

ENVIRONMENTAL METRICS

91 EPNdB
Lateral Takeoff Noise

101 PNLdB
Sonic Boom

0 kg/km/pax
Emissions (CO_2e)

0.17 kg/km/pax
Fuel Consumption Rate

AIRCRAFT NOTES

- Supersonic cruise condition L/D = 4.3
- Supersonic cruise condition Isp = 3118 s
- Vehicle propellant mass fraction (PMF) = 0.47
- Takeoff T/W = 0.375
- Effective Dose Rate (51° Lat.) = 8.1 μSv/hr

NASA SBIR Contract #80NSSC22C0008

LH2 Matrix – Aircraft 5

SpaceWorks

NASA

ID: LH2.M5.P20.R4000.20230518

Key Inputs

Mach 5
Cruise Speed

4,000 nmi
Range

20
Passenger Count

LH2
Fuel Type

OPERATOR METRICS

$18,300-$20,600
Ticket Price

0.0M
Pax/Year

6
Routes Captured

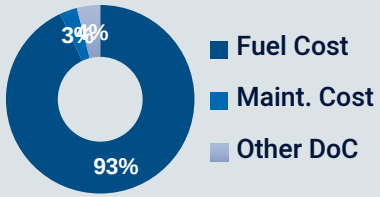

MANUFACTURER METRICS

$230M
Aircraft Price

$122M
Airframe Price

$27M x4
Engine Price

110
Aircraft Sold

KEY EVENTS & DATES

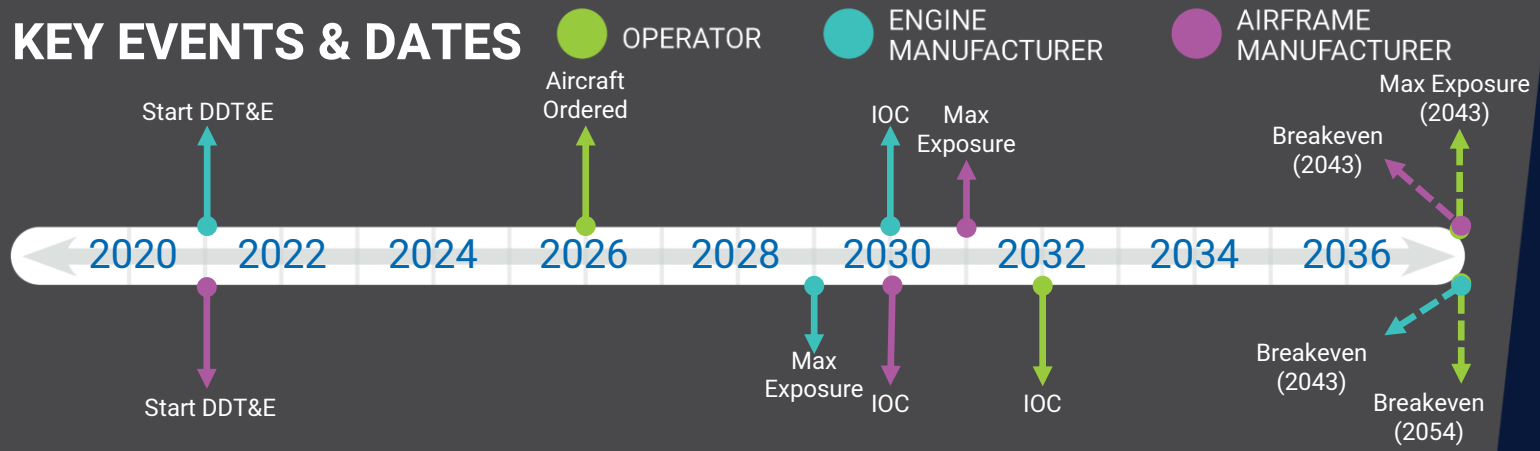

Business Results

OPERATOR

-67%
ROIC (avg)

$-183M
NPV

$2.0B
Max Exposure

ENGINE MANUFACTURER

3%
IRR

$-2.6B
NPV

$8.1B
Max Exposure

AIRFRAME MANUFACTURER

4%
IRR

$-3.5B
NPV

$12B
Max Exposure

BUSINESS CASE ANALYSIS

This aircraft is capturing 6 of 37 addressable routes that are within its design range which are exclusively Atlantic Ocean routes.

NASA SBIR Contract #80NSSC22C0008

LH2 Matrix – Aircraft 6

ID: LH2.M1.5.P50.R4000.20230518

Mach 1.5
Cruise Speed

4,000 nmi
Max Range

50
Passenger Count

LH2
Fuel Type

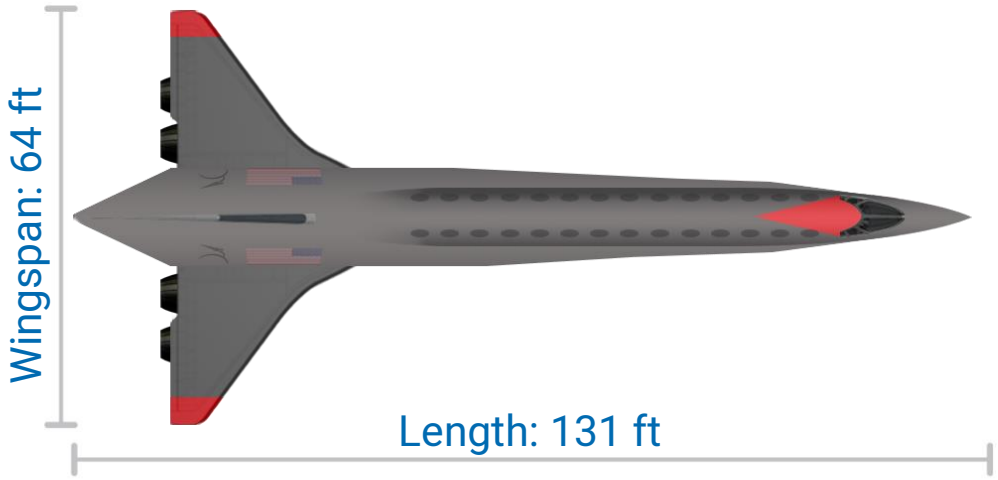

COST METRICS (FY21 USD)

DDT&E

$6.7B Airframe

$3.2B Engine

TFU

$93M Airframe

$7.7M Engine

ENVIRONMENTAL METRICS

90 EPNdB
Lateral Takeoff Noise

106 PNLdB
Sonic Boom

0 kg/km/pax
Emissions (CO_2e)

0.04 kg/km/pax
Fuel Consumption Rate

122,000 lbm
MTOW

77,700 lbm
MEW

4 x 11,500 lbf
Engine Thrust SLS

5.5 hours
Gate-to-Gate Time
at Max Range

44,400 ft
Cruise Altitude

7,400 ft
Bal. Field Length SL

AIRCRAFT NOTES

- Supersonic cruise condition L/D = 8
- Supersonic cruise condition Isp = 9577 s
- Vehicle propellant mass fraction (PMF) = 0.47
- Takeoff T/W = 0.375
- Effective Dose Rate (51° Lat.) = 6.4 μSv/hr

NASA SBIR Contract #80NSSC22C0008

LH2 Matrix – Aircraft 6

SpaceWorks

NASA

ID: LH2.M1.5.P50.R4000.20230518

Key Inputs

Mach 1.5
Cruise Speed

4,000 nmi
Range

50
Passenger Count

LH2
Fuel Type

OPERATOR METRICS

$5,300-$5,900
Ticket Price

0.6M
Pax/Year

16
Routes Captured

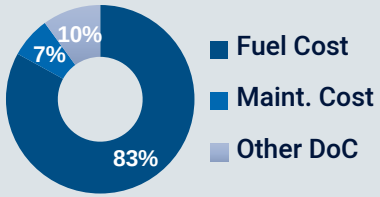

MANUFACTURER METRICS

$227M
Aircraft Price

$162M
Airframe Price

$16M x4
Engine Price

166
Aircraft Sold

KEY EVENTS & DATES

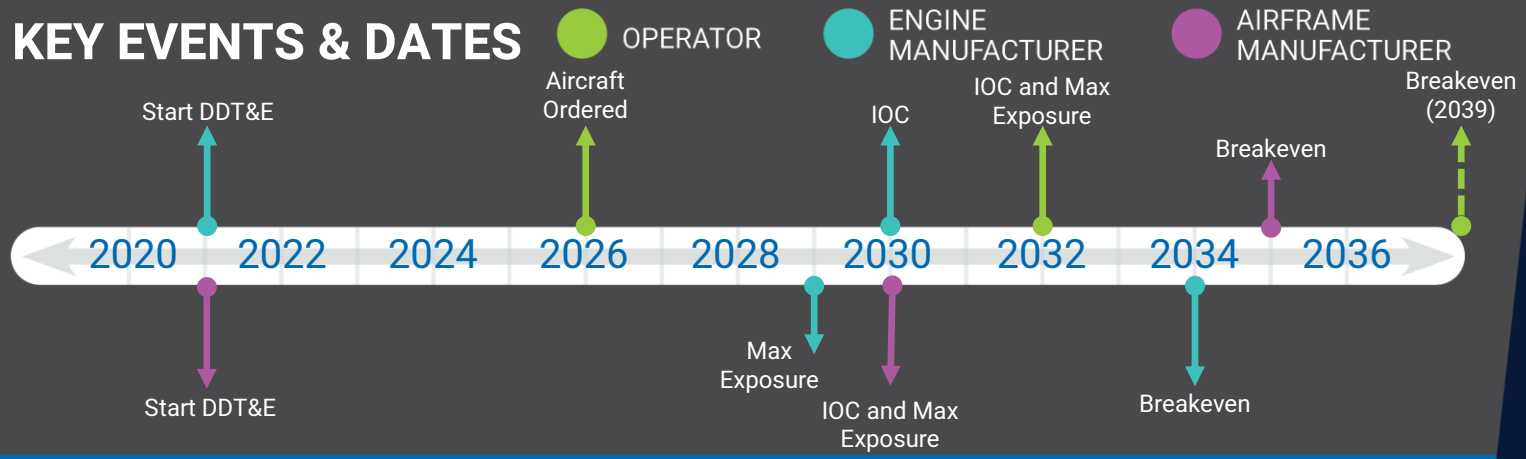

Business Results

OPERATOR

8%
ROIC (avg)

$224M
NPV

$1.7B
Max Exposure

ENGINE MANUFACTURER

12%
IRR

$-342M
NPV

$3.6B
Max Exposure

AIRFRAME MANUFACTURER

12%
IRR

$-759M
NPV

$8.4B
Max Exposure

BUSINESS CASE ANALYSIS

This aircraft is capturing 16 of 37 addressable routes that are within its design range which are exclusively Atlantic Ocean routes.

NASA SBIR Contract #80NSSC22C0008

LH2 Matrix – Aircraft 7

ID: LH2.M2.P50.R4000.20230518

Mach 2
Cruise Speed

4,000 nmi
Max Range

50
Passenger Count

LH2
Fuel Type

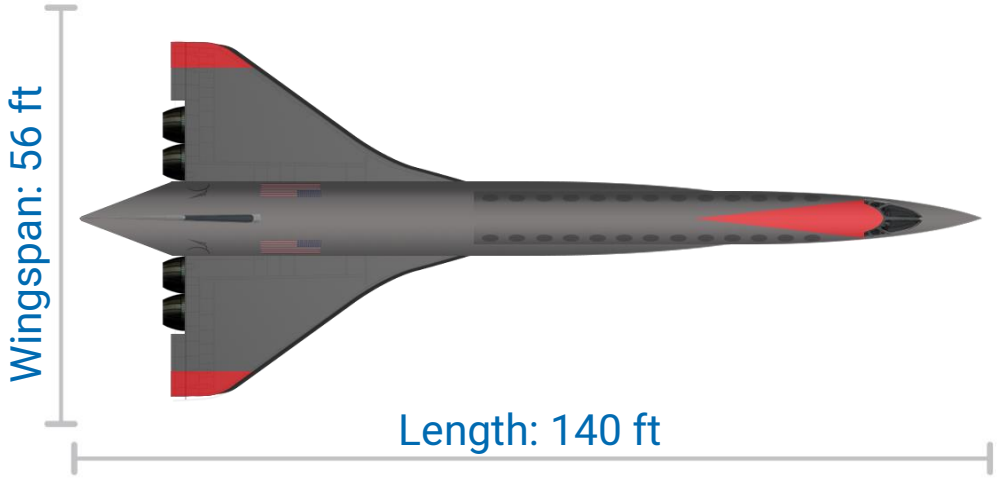

148,000 lbm MTOW	**91,600 lbm** MEW	**4 x 13,800 lbf** Engine Thrust SLS
4.4 hours Gate-to-Gate Time at Max Range	**56,300 ft** Cruise Altitude	**8,300 ft** Bal. Field Length SL

COST METRICS (FY21 USD)

DDT&E

$7.6B Airframe

$3.9B Engine

TFU

$107M Airframe

$11M Engine

ENVIRONMENTAL METRICS

91 EPNdB
Lateral Takeoff Noise

105 PNLdB
Sonic Boom

0 kg/km/pax
Emissions (CO_2e)

0.05 kg/km/pax
Fuel Consumption Rate

AIRCRAFT NOTES

- Supersonic cruise condition L/D = 6.7
- Supersonic cruise condition Isp = 7200 s
- Vehicle propellant mass fraction (PMF) = 0.47
- Takeoff T/W = 0.375
- Effective Dose Rate (51° Lat.) = 9.0 μSv/hr

NASA SBIR Contract #80NSSC22C0008

LH2 Matrix – Aircraft 7

SpaceWorks

NASA

ID: LH2.M2.P50.R4000.20230518

Key Inputs

Mach 2
Cruise Speed

4,000 nmi
Range

50
Passenger Count

LH2
Fuel Type

OPERATOR METRICS

$5,900-$6,700
Ticket Price

0.5M
Pax/Year

16
Routes Captured

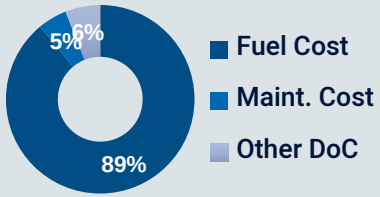

MANUFACTURER METRICS

$242M
Aircraft Price

$166M
Airframe Price

$19M x4
Engine Price

149
Aircraft Sold

KEY EVENTS & DATES

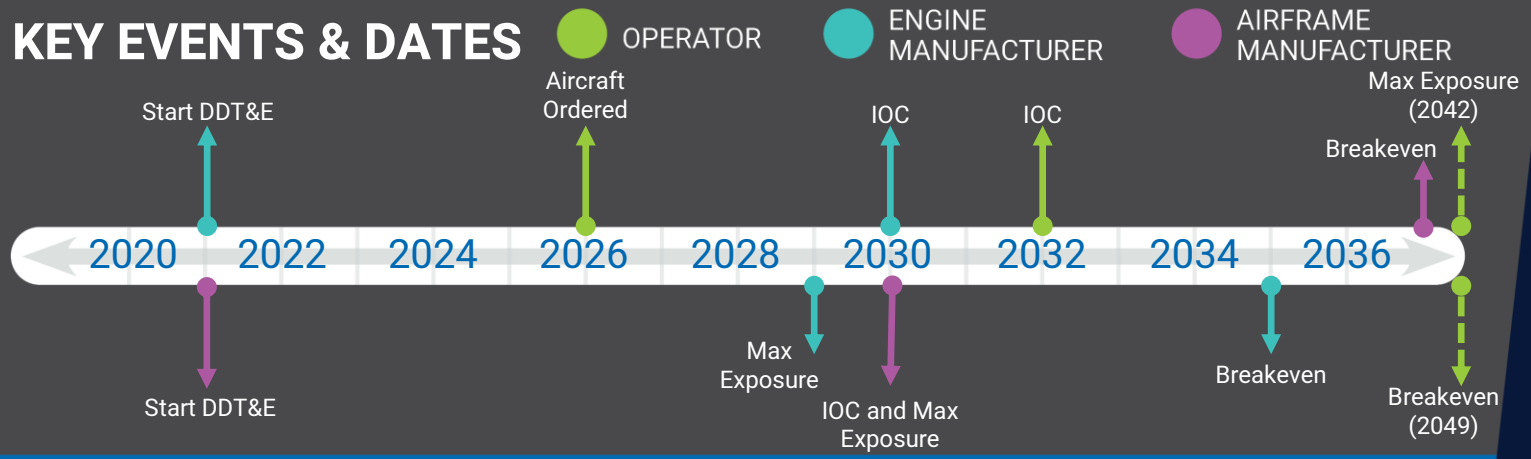

Business Results

OPERATOR

4%
ROIC (avg)

$-230M
NPV

$3.5B
Max Exposure

ENGINE MANUFACTURER

10%
IRR

$-730M
NPV

$4.4B
Max Exposure

AIRFRAME MANUFACTURER

10%
IRR

$-1.6B
NPV

$9.8B
Max Exposure

BUSINESS CASE ANALYSIS

This aircraft is capturing 16 of 37 addressable routes that are within its design range which are exclusively Atlantic Ocean routes.

NASA SBIR Contract #80NSSC22C0008

LH2 Matrix – Aircraft 8

ID: LH2.M3.P50.R4000.20230518

Mach 3
Cruise Speed

4,000 nmi
Max Range

50
Passenger Count

LH2
Fuel Type

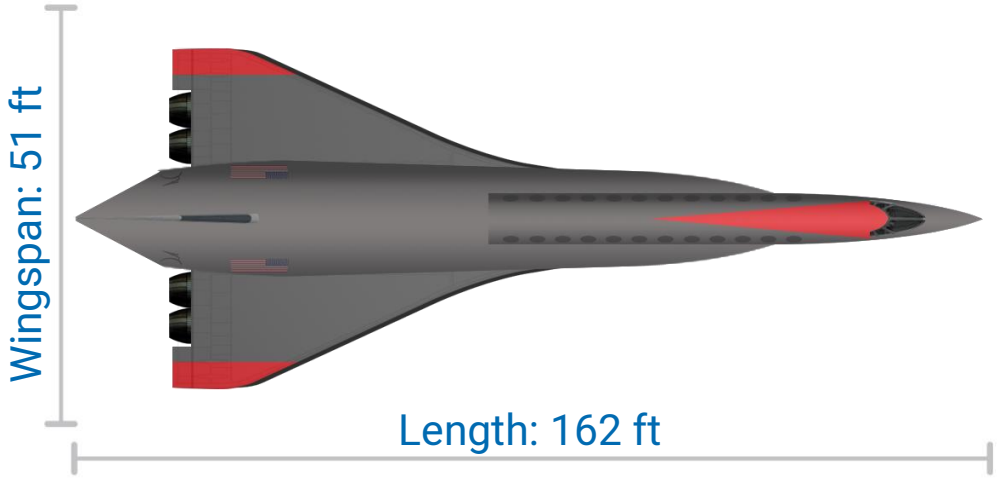

210,000 lbm
MTOW

126,400 lbm
MEW

4 x 19,700 lbf
Engine Thrust SLS

3.1 hours
Gate-to-Gate Time
at Max Range

73,300 ft
Cruise Altitude

10,200 ft
Bal. Field Length SL

COST METRICS (FY21 USD)

DDT&E

$9.6B Airframe

$5.4B Engine

TFU

$142M Airframe

$21M Engine

ENVIRONMENTAL METRICS

92 EPNdB
Lateral Takeoff Noise

104 PNLdB
Sonic Boom

0 kg/km/pax
Emissions (CO_2e)

0.08 kg/km/pax
Fuel Consumption Rate

AIRCRAFT NOTES

- Supersonic cruise condition L/D = 5.3
- Supersonic cruise condition Isp = 4799 s
- Vehicle propellant mass fraction (PMF) = 0.47
- Takeoff T/W = 0.375
- Effective Dose Rate (51° Lat.) = 9.1 μSv/hr

NASA SBIR Contract #80NSSC22C0008

LH2 Matrix – Aircraft 8

ID: LH2.M3.P50.R4000.20230518

Key Inputs

Mach 3
Cruise Speed

4,000 nmi
Range

50
Passenger Count

LH2
Fuel Type

OPERATOR METRICS

$12,100-$13,700
Ticket Price

0.0M
Pax/Year

2
Routes Captured

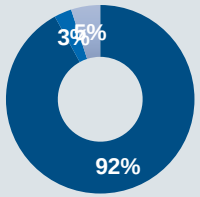

MANUFACTURER METRICS

$777M
Aircraft Price

$484M
Airframe Price

$73M x4
Engine Price

25
Aircraft Sold

KEY EVENTS & DATES

OPERATOR
ENGINE MANUFACTURER
AIRFRAME MANUFACTURER

Business Results

BUSINESS CASE ANALYSIS

BUSINESS CASE SOLUTION DID NOT CLOSE

NASA SBIR Contract #80NSSC22C0008

LH2 Matrix – Aircraft 9

ID: LH2.M4.P50.R4000.20230518

Mach 4
Cruise Speed

4,000 nmi
Max Range

50
Passenger Count

LH2
Fuel Type

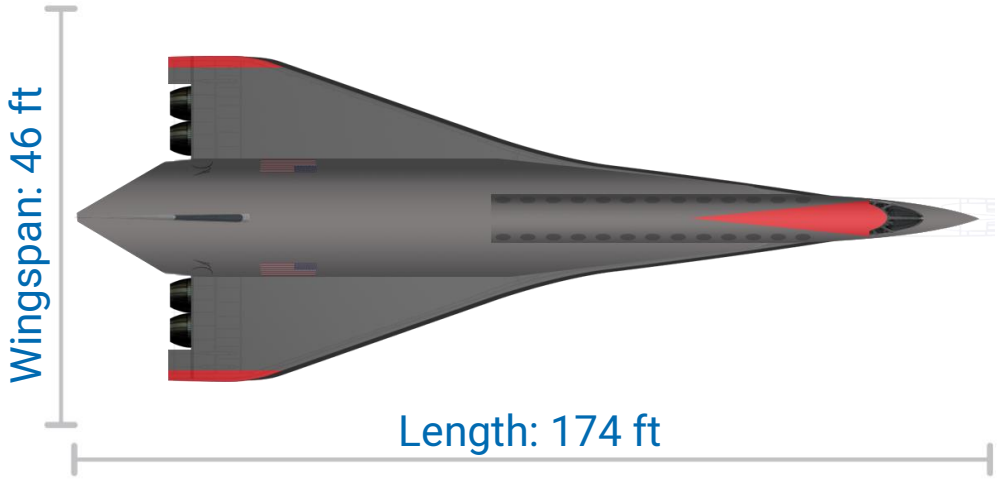

246,000 lbm
MTOW

148,600 lbm
MEW

4 x 23,100 lbf
Engine Thrust SLS

2.5 hours
Gate-to-Gate Time
at Max Range

85,500 ft
Cruise Altitude

12,500 ft
Bal. Field Length SL

COST METRICS (FY21 USD)

DDT&E

$11B Airframe

$6.8B Engine

TFU

$162M Airframe

$32M Engine

ENVIRONMENTAL METRICS

93 EPNdB
Lateral Takeoff Noise

103 PNLdB
Sonic Boom

0 kg/km/pax
Emissions (CO_2e)

0.1 kg/km/pax
Fuel Consumption Rate

AIRCRAFT NOTES

- Supersonic cruise condition L/D = 4.7
- Supersonic cruise condition Isp = 3839 s
- Vehicle propellant mass fraction (PMF) = 0.47
- Takeoff T/W = 0.375
- Effective Dose Rate (51° Lat.) = 8.5 μSv/hr

NASA SBIR Contract #80NSSC22C0008

LH2 Matrix – Aircraft 9

ID: LH2.M4.P50.R4000.20230518

Key Inputs

Mach 4
Cruise Speed

4,000 nmi
Range

50
Passenger Count

LH2
Fuel Type

OPERATOR METRICS

$12,900-$14,500
Ticket Price

0.0M
Pax/Year

2
Routes Captured

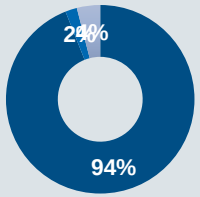

MANUFACTURER METRICS

$753M
Aircraft Price

$415M
Airframe Price

$84M x4
Engine Price

25
Aircraft Sold

KEY EVENTS & DATES

OPERATOR
ENGINE MANUFACTURER
AIRFRAME MANUFACTURER

2020

Business Results

BUSINESS CASE ANALYSIS

BUSINESS CASE SOLUTION DID NOT CLOSE

Max Exposure

NASA SBIR Contract #80NSSC22C0008

LH2 Matrix – Aircraft 10

ID: LH2.M5.P50.R4000.20230518

Mach 5
Cruise Speed

4,000 nmi
Max Range

50
Passenger Count

LH2
Fuel Type

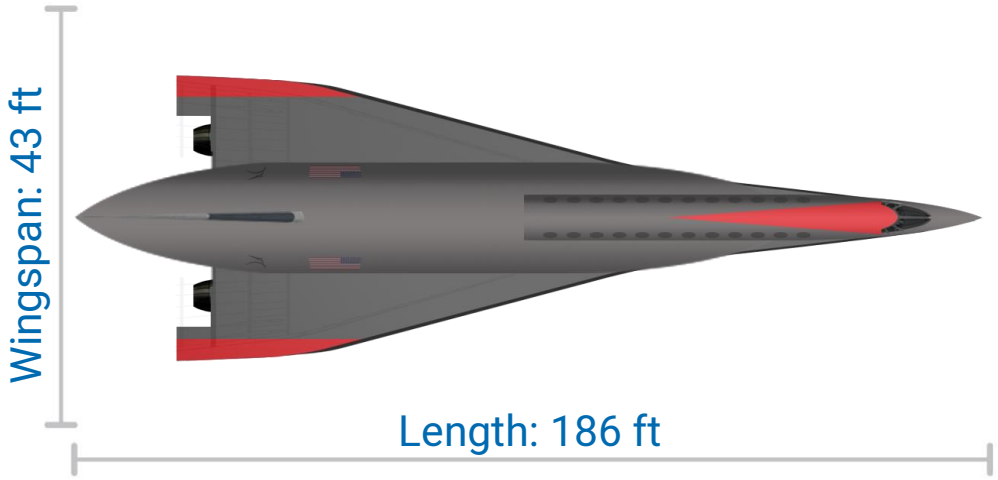

286,000 lbm
MTOW

174,300 lbm
MEW

4 x 26,800 lbf
Engine Thrust SLS

2.1 hours
Gate-to-Gate Time
at Max Range

95,100 ft
Cruise Altitude

15,200 ft
Bal. Field Length SL

COST METRICS (FY21 USD)

DDT&E

$12B Airframe

$8.4B Engine

TFU

$185M Airframe

$47M Engine

ENVIRONMENTAL METRICS

94 EPNdB
Lateral Takeoff Noise

103 PNLdB
Sonic Boom

0 kg/km/pax
Emissions (CO_2e)

0.12 kg/km/pax
Fuel Consumption Rate

AIRCRAFT NOTES

- Supersonic cruise condition L/D = 4.3
- Supersonic cruise condition Isp = 3118 s
- Vehicle propellant mass fraction (PMF) = 0.47
- Takeoff T/W = 0.375
- Effective Dose Rate (51° Lat.) = 8.1 μSv/hr

NASA SBIR Contract #80NSSC22C0008

LH2 Matrix – Aircraft 10

ID: LH2.M5.P50.R4000.20230518

Key Inputs

Mach 5
Cruise Speed

4,000 nmi
Range

50
Passenger Count

LH2
Fuel Type

OPERATOR METRICS

$14,400-$16,200
Ticket Price

0.0M
Pax/Year

2
Routes Captured

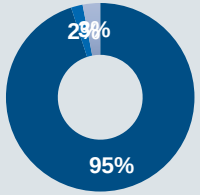

MANUFACTURER METRICS

$639M
Aircraft Price

$311M
Airframe Price

$82M x4
Engine Price

26
Aircraft Sold

KEY EVENTS & DATES

OPERATOR
ENGINE MANUFACTURER
AIRFRAME MANUFACTURER

Business Results

BUSINESS CASE ANALYSIS

BUSINESS CASE SOLUTION DID NOT CLOSE

NASA SBIR Contract #80NSSC22C0008

LH2 Matrix – Aircraft 11

ID: LH2.M1.5.P20.R6510.20230518

Mach 1.5
Cruise Speed

6,510 nmi
Max Range

20
Passenger Count

LH2
Fuel Type

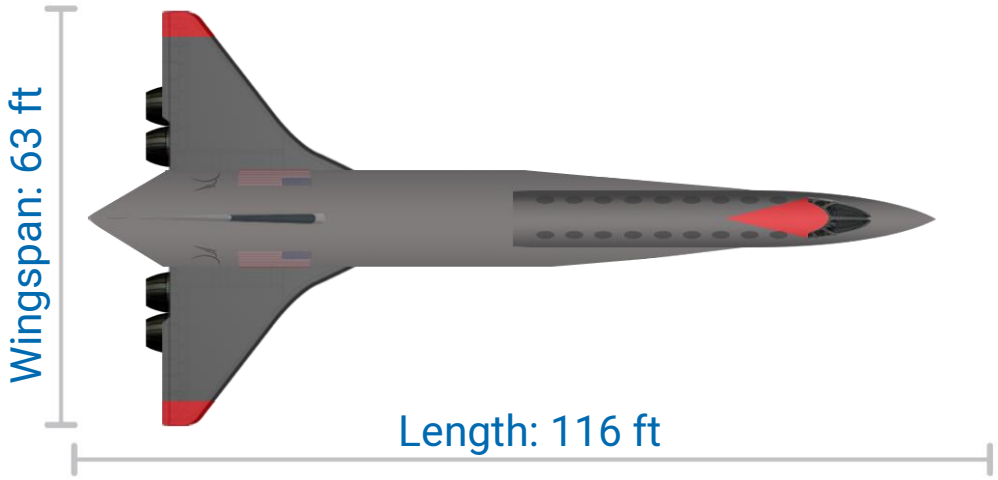

128,000 lbm
MTOW

77,200 lbm
MEW

4 x 12,000 lbf
Engine Thrust SLS

8.4 hours
Gate-to-Gate Time
at Max Range

44,400 ft
Cruise Altitude

7,400 ft
Bal. Field Length SL

COST METRICS (FY21 USD)

DDT&E

$6.8B Airframe

$3.3B Engine

TFU

$93M Airframe

$8.1M Engine

ENVIRONMENTAL METRICS

90 EPNdB
Lateral Takeoff Noise

106 PNLdB
Sonic Boom

0 kg/km/pax
Emissions (CO_2e)

0.08 kg/km/pax
Fuel Consumption Rate

AIRCRAFT NOTES

- Supersonic cruise condition L/D = 8
- Supersonic cruise condition Isp = 9577 s
- Vehicle propellant mass fraction (PMF) = 0.47
- Takeoff T/W = 0.375
- Effective Dose Rate (51° Lat.) = 6.4 μSv/hr

NASA SBIR Contract #80NSSC22C0008

LH2 Matrix – Aircraft 11

SpaceWorks

NASA

ID: LH2.M1.5.P20.R6510.20230518

Key Inputs

Mach 1.5
Cruise Speed

6,510 nmi
Range

20
Passenger Count

LH2
Fuel Type

OPERATOR METRICS

$17,100-$22,800
Ticket Price

0.1M
Pax/Year

15
Routes Captured

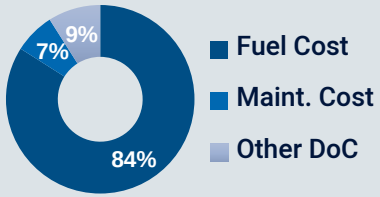

MANUFACTURER METRICS

$235M
Aircraft Price

$165M
Airframe Price

$18M x4
Engine Price

157
Aircraft Sold

KEY EVENTS & DATES

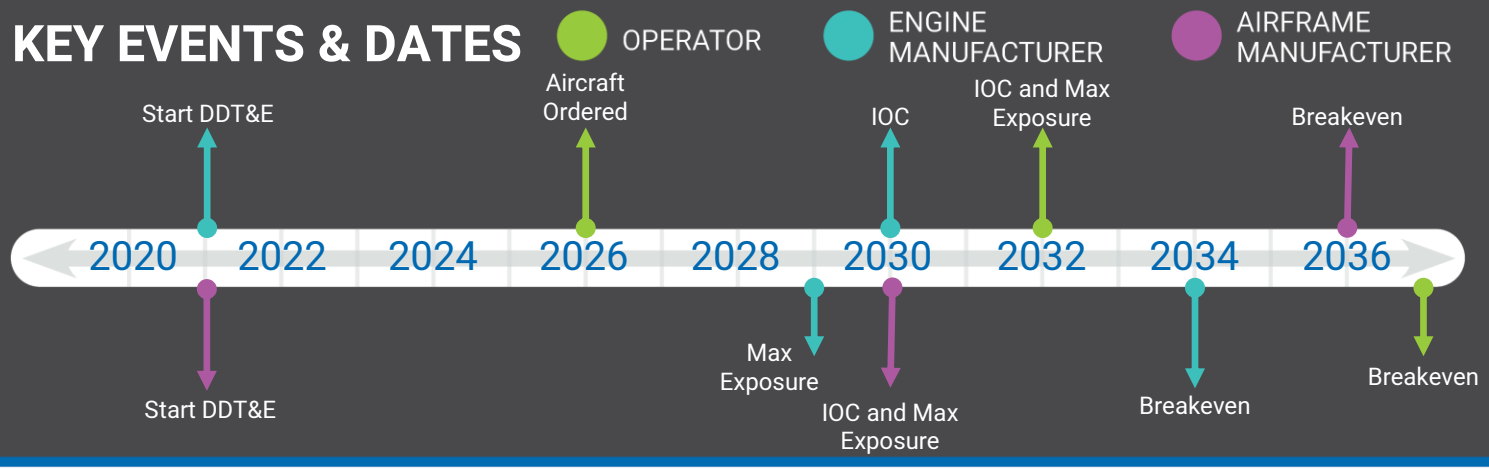

Business Results

OPERATOR

5%
ROIC (avg)

$201M
NPV

$1.4B
Max Exposure

ENGINE MANUFACTURER

12%
IRR

$-384M
NPV

$3.7B
Max Exposure

AIRFRAME MANUFACTURER

12%
IRR

$-884M
NPV

$8.5B
Max Exposure

BUSINESS CASE ANALYSIS

This aircraft is capturing 15 of 84 addressable routes that are within its design range which are a mix of Atlantic & Pacific Ocean routes.

NASA SBIR Contract #80NSSC22C0008

LH2 Matrix – Aircraft 12

ID: LH2.M2.P20.R6100.20230518

Mach 2
Cruise Speed

6,100 nmi
Max Range

20
Passenger Count

LH2
Fuel Type

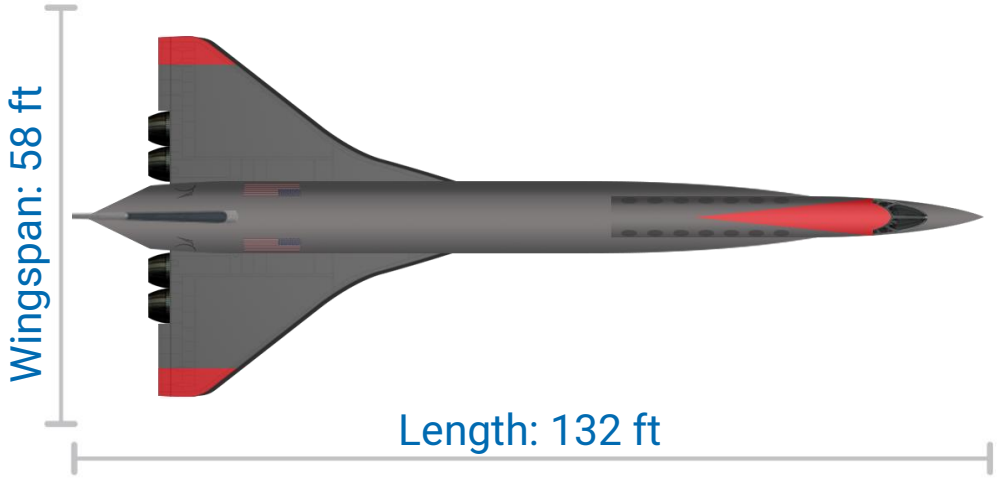

175,000 lbm
MTOW

102,300 lbm
MEW

4 x 16,400 lbf
Engine Thrust SLS

6.2 hours
Gate-to-Gate Time
at Max Range

56,300 ft
Cruise Altitude

8,300 ft
Bal. Field Length SL

COST METRICS (FY21 USD)

DDT&E

$8.3B Airframe

$4.1B Engine

TFU

$119M Airframe

$13M Engine

ENVIRONMENTAL METRICS

91 EPNdB
Lateral Takeoff Noise

105 PNLdB
Sonic Boom

0 kg/km/pax
Emissions (CO_2e)

0.13 kg/km/pax
Fuel Consumption Rate

AIRCRAFT NOTES

- Supersonic cruise condition L/D = 6.7
- Supersonic cruise condition Isp = 7200 s
- Vehicle propellant mass fraction (PMF) = 0.47
- Takeoff T/W = 0.375
- Effective Dose Rate (51° Lat.) = 9.0 μSv/hr

NASA SBIR Contract #80NSSC22C0008

LH2 Matrix – Aircraft 12

SpaceWorks

NASA

ID: LH2.M2.P20.R6100.20230518

Key Inputs

Mach 2
Cruise Speed

6,100 nmi
Range

20
Passenger Count

LH2
Fuel Type

OPERATOR METRICS

$20,000-$26,200
Ticket Price

0.1M
Pax/Year

8
Routes Captured

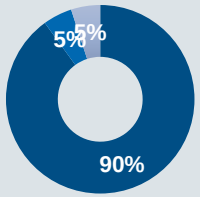

MANUFACTURER METRICS

$182M
Aircraft Price

$121M
Airframe Price

$15M x4
Engine Price

131
Aircraft Sold

KEY EVENTS & DATES

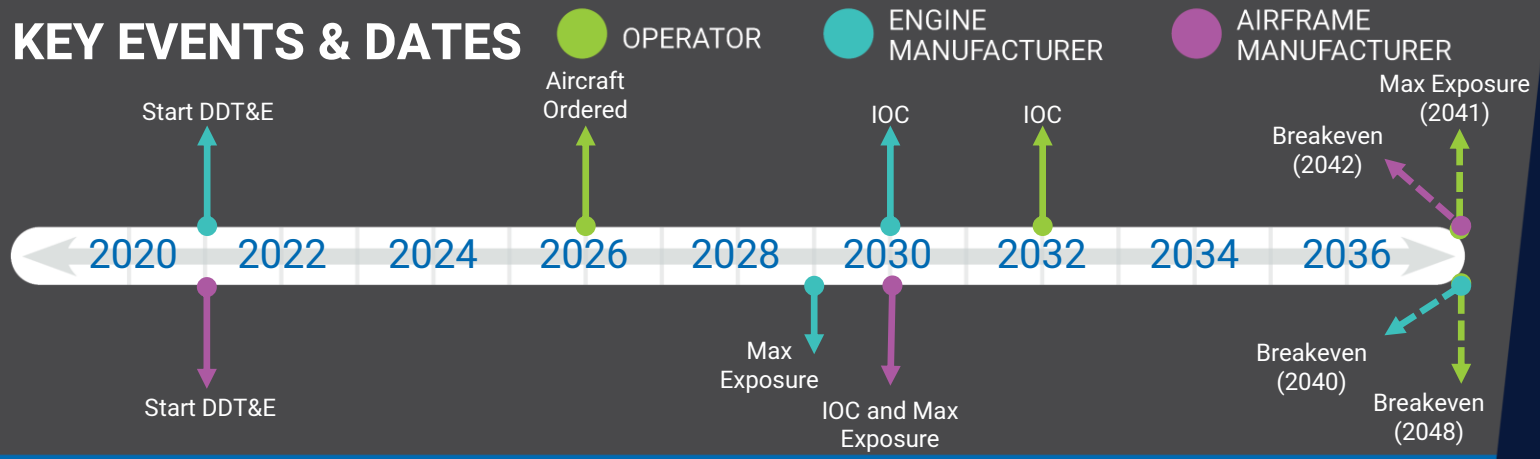

Business Results

OPERATOR

2%
ROIC (avg)

$-72.5M
NPV

$1.3B
Max Exposure

ENGINE MANUFACTURER

4%
IRR

$-1.5B
NPV

$5.0B
Max Exposure

AIRFRAME MANUFACTURER

4%
IRR

$-3.2B
NPV

$11B
Max Exposure

BUSINESS CASE ANALYSIS

This aircraft is capturing 8 of 80 addressable routes that are within its design range which are a mix of Atlantic & Pacific Ocean routes.

NASA SBIR Contract #80NSSC22C0008

LH2 Matrix – Aircraft 13

ID: LH2.M3.P20.R5700.20230518

Mach 3
Cruise Speed

5,700 nmi
Max Range

20
Passenger Count

LH2
Fuel Type

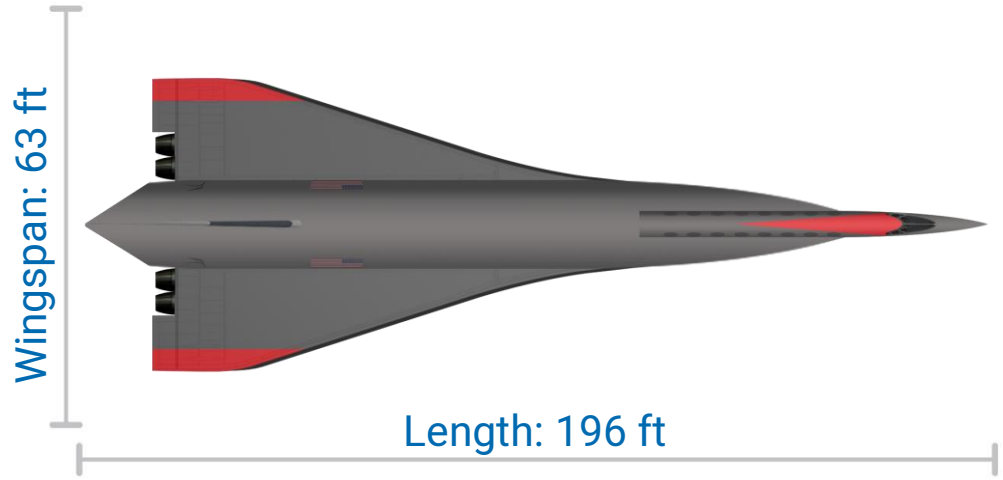

374,000 lbm
MTOW

211,700 lbm
MEW

4 x 35,100 lbf
Engine Thrust SLS

4.1 hours
Gate-to-Gate Time
at Max Range

73,300 ft
Cruise Altitude

10,200 ft
Bal. Field Length SL

COST METRICS (FY21 USD)

DDT&E

$14B Airframe

$6.9B Engine

TFU

$223M Airframe

$37M Engine

ENVIRONMENTAL METRICS

95 EPNdB
Lateral Takeoff Noise

105 PNLdB
Sonic Boom

0.01 kg/km/pax
Emissions (CO_2e)

0.33 kg/km/pax
Fuel Consumption Rate

AIRCRAFT NOTES

- Supersonic cruise condition L/D = 5.3
- Supersonic cruise condition Isp = 4799 s
- Vehicle propellant mass fraction (PMF) = 0.47
- Takeoff T/W = 0.375
- Effective Dose Rate (51° Lat.) = 9.1 μSv/hr

NASA SBIR Contract #80NSSC22C0008

LH2 Matrix – Aircraft 13

ID: LH2.M3.P20.R5700.20230518

Key Inputs

Mach 3
Cruise Speed

5,700 nmi
Range

20
Passenger Count

LH2
Fuel Type

OPERATOR METRICS

$19,600-$25,000
Ticket Price

0.1M
Pax/Year

12
Routes Captured

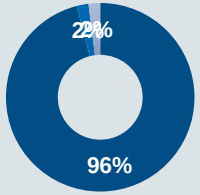

MANUFACTURER METRICS

$2.2B
Aircraft Price

$1.7B
Airframe Price

$131M x4
Engine Price

59
Aircraft Sold

KEY EVENTS & DATES

OPERATOR
ENGINE MANUFACTURER
AIRFRAME MANUFACTURER

Business Results

BUSINESS CASE ANALYSIS

BUSINESS CASE SOLUTION DID NOT CLOSE

NASA SBIR Contract #80NSSC22C0008

LH2 Matrix – Aircraft 14

ID: LH2.M4.P20.R5400.20230518

Mach 4
Cruise Speed

5,400 nmi
Max Range

20
Passenger Count

LH2
Fuel Type

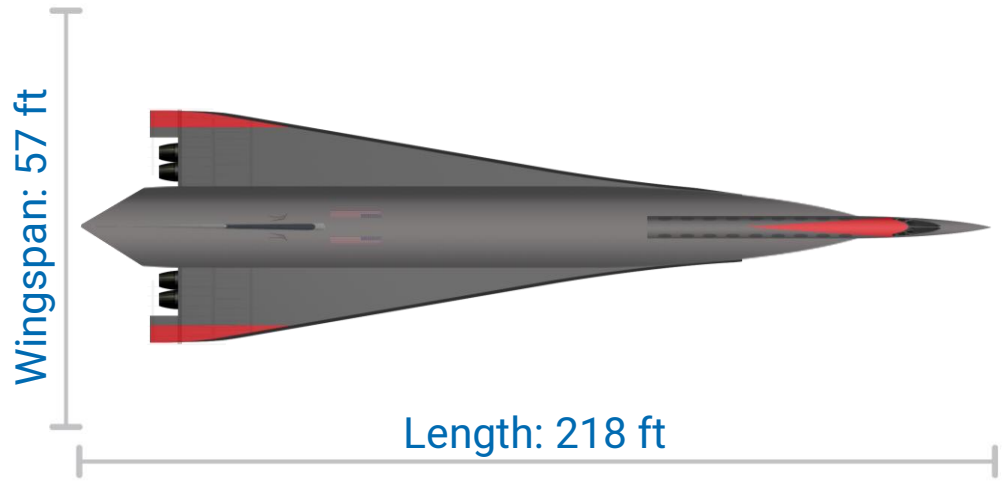

447,000 lbm
MTOW

255,100 lbm
MEW

4 x 41,900 lbf
Engine Thrust SLS

3.1 hours
Gate-to-Gate Time
at Max Range

85,500 ft
Cruise Altitude

12,500 ft
Bal. Field Length SL

COST METRICS (FY21 USD)

DDT&E

$16B Airframe

$8.7B Engine

TFU

$260M Airframe

$58M Engine

ENVIRONMENTAL METRICS

96 EPNdB
Lateral Takeoff Noise

105 PNLdB
Sonic Boom

0.01 kg/km/pax
Emissions (CO_2e)

0.42 kg/km/pax
Fuel Consumption Rate

AIRCRAFT NOTES

- Supersonic cruise condition L/D = 4.7
- Supersonic cruise condition Isp = 3839 s
- Vehicle propellant mass fraction (PMF) = 0.47
- Takeoff T/W = 0.375
- Effective Dose Rate (51° Lat.) = 8.5 μSv/hr

NASA SBIR Contract #80NSSC22C0008

LH2 Matrix – Aircraft 14

ID: LH2.M4.P20.R5400.20230518

Key Inputs

Mach 4
Cruise Speed

5,400 nmi
Range

20
Passenger Count

LH2
Fuel Type

OPERATOR METRICS

$16,400-$20,600
Ticket Price

0.1M
Pax/Year

15
Routes Captured

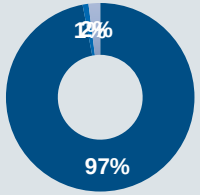

MANUFACTURER METRICS

$3.2B
Aircraft Price

$2.4B
Airframe Price

$204M x4
Engine Price

70
Aircraft Sold

KEY EVENTS & DATES

OPERATOR
ENGINE MANUFACTURER
AIRFRAME MANUFACTURER

Max Exposure (2057)

Business Results

BUSINESS CASE ANALYSIS

BUSINESS CASE SOLUTION DID NOT CLOSE

NASA SBIR Contract #80NSSC22C0008

LH2 Matrix – Aircraft 15

ID: LH2.M5.P20.R5000.20230518

Mach 5
Cruise Speed

5,000 nmi
Max Range

20
Passenger Count

LH2
Fuel Type

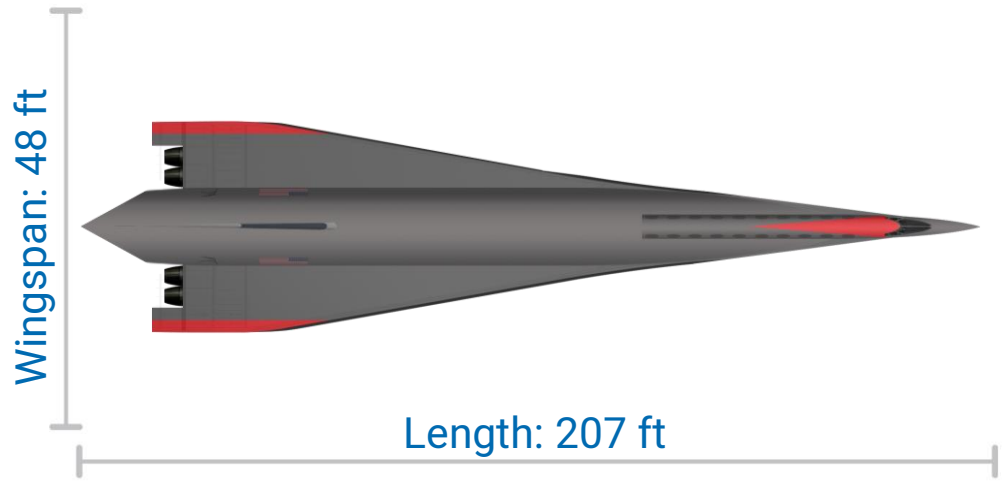

416,000 lbm
MTOW

243,300 lbm
MEW

4 x 39,000 lbf
Engine Thrust SLS

2.4 hours
Gate-to-Gate Time
at Max Range

95,100 ft
Cruise Altitude

15,200 ft
Bal. Field Length SL

COST METRICS (FY21 USD)

DDT&E

$15B Airframe

$9.8B Engine

TFU

$246M Airframe

$68M Engine

ENVIRONMENTAL METRICS

96 EPNdB
Lateral Takeoff Noise

104 PNLdB
Sonic Boom

0.01 kg/km/pax
Emissions (CO_2e)

0.41 kg/km/pax
Fuel Consumption Rate

AIRCRAFT NOTES

- Supersonic cruise condition L/D = 4.3
- Supersonic cruise condition Isp = 3118 s
- Vehicle propellant mass fraction (PMF) = 0.47
- Takeoff T/W = 0.375
- Effective Dose Rate (51° Lat.) = 8.1 μSv/hr

NASA SBIR Contract #80NSSC22C0008

LH2 Matrix – Aircraft 15

ID: LH2.M5.P20.R5000.20230518

Key Inputs

Mach 5
Cruise Speed

5,000 nmi
Range

20
Passenger Count

LH2
Fuel Type

OPERATOR METRICS

$1,600-$2,000
Ticket Price

7.2M
Pax/Year

63
Routes Captured

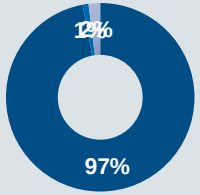

MANUFACTURER METRICS

$3.5B
Aircraft Price

$2.5B
Airframe Price

$238M x4
Engine Price

8567
Aircraft Sold

KEY EVENTS & DATES

OPERATOR
ENGINE MANUFACTURER
AIRFRAME MANUFACTURER

Business Results

BUSINESS CASE ANALYSIS

BUSINESS CASE SOLUTION DID NOT CLOSE

NASA SBIR Contract #80NSSC22C0008

LH2 Matrix – Aircraft 16

ID: LH2.M1.5.P50.R6510.20230518

Mach 1.5
Cruise Speed

6,510 nmi
Max Range

50
Passenger Count

LH2
Fuel Type

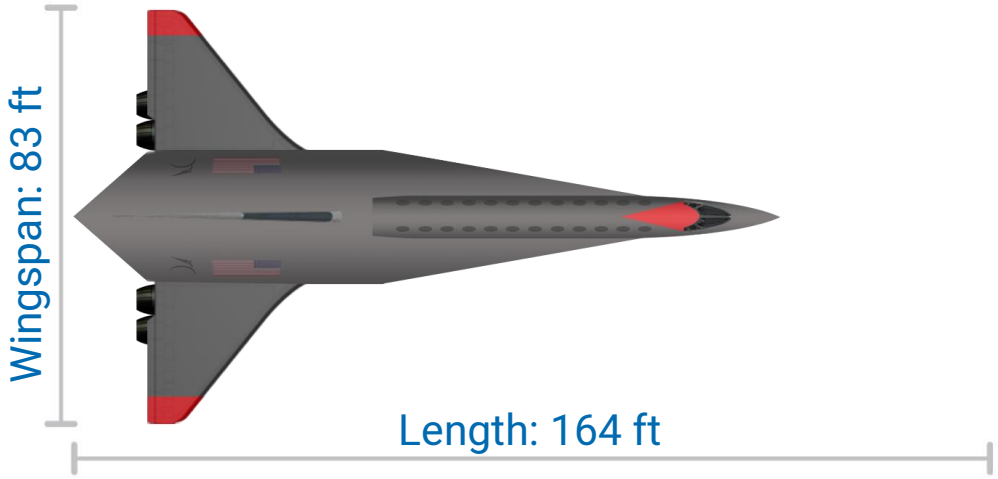

225,000 lbm
MTOW

133,300 lbm
MEW

4 x 21,100 lbf
Engine Thrust SLS

8.4 hours
Gate-to-Gate Time
at Max Range

44,400 ft
Cruise Altitude

7,400 ft
Bal. Field Length SL

COST METRICS (FY21 USD)

DDT&E

$10B Airframe

$4.1B Engine

TFU

$147M Airframe

$14M Engine

ENVIRONMENTAL METRICS

93 EPNdB
Lateral Takeoff Noise

108 PNLdB
Sonic Boom

0 kg/km/pax
Emissions (CO_2e)

0.06 kg/km/pax
Fuel Consumption Rate

AIRCRAFT NOTES

- Supersonic cruise condition L/D = 8
- Supersonic cruise condition Isp = 9577 s
- Vehicle propellant mass fraction (PMF) = 0.47
- Takeoff T/W = 0.375
- Effective Dose Rate (51° Lat.) = 6.4 μSv/hr

NASA SBIR Contract #80NSSC22C0008

LH2 Matrix – Aircraft 16

SpaceWorks

NASA

ID: LH2.M1.5.P50.R6510.20230518

Key Inputs

Mach 1.5
Cruise Speed

6,510 nmi
Range

50
Passenger Count

LH2
Fuel Type

OPERATOR METRICS

$8,600-$11,500
Ticket Price

0.4M
Pax/Year

20
Routes Captured

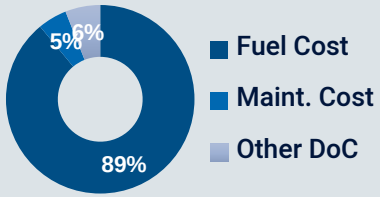

MANUFACTURER METRICS

$262M
Aircraft Price

$188M
Airframe Price

$18M x4
Engine Price

161
Aircraft Sold

KEY EVENTS & DATES

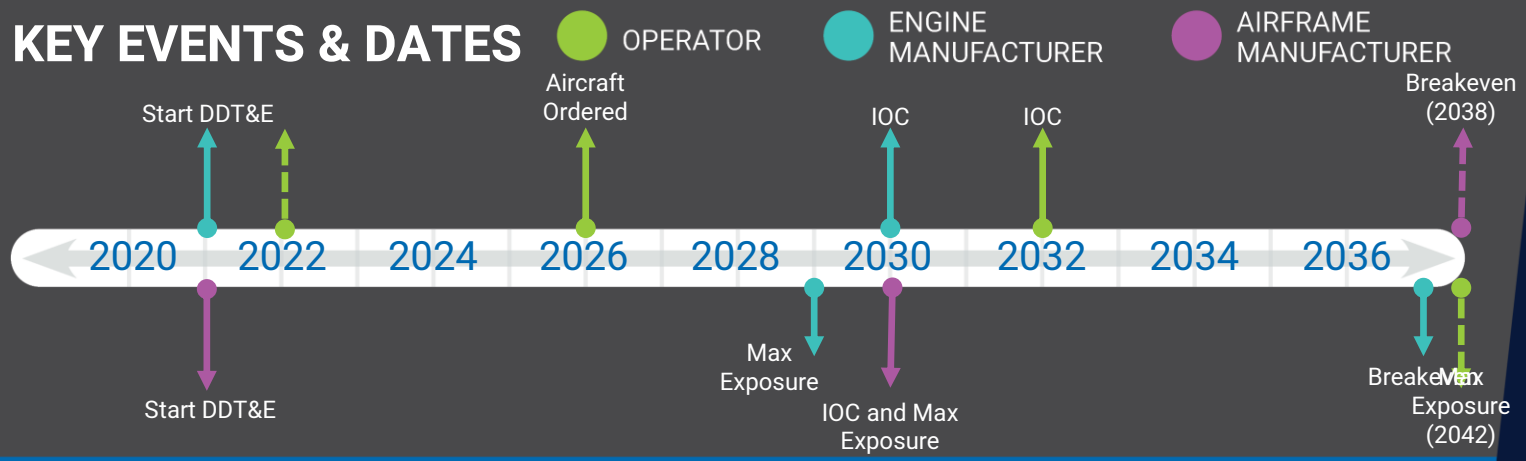

Business Results

OPERATOR

4% ROIC (avg)
$-233.2M NPV
$3.5B Max Exposure

ENGINE MANUFACTURER

8% IRR
$-1029.2M NPV
$4.7B Max Exposure

AIRFRAME MANUFACTURER

8% IRR
$-2727.1M NPV
$12B Max Exposure

BUSINESS CASE ANALYSIS

This aircraft is capturing 20 of 84 addressable routes that are within its design range which are a mix of Atlantic & Pacific Ocean routes.

NASA SBIR Contract #80NSSC22C0008

LH2 Matrix – Aircraft 17

ID: LH2.M2.P50.R6100.20230518

Mach 2
Cruise Speed

6,100 nmi
Max Range

50
Passenger Count

LH2
Fuel Type

307,000 lbm
MTOW

177,600 lbm
MEW

4 x 28,800 lbf
Engine Thrust SLS

6.2 hours
Gate-to-Gate Time
at Max Range

56,300 ft
Cruise Altitude

8,300 ft
Bal. Field Length SL

COST METRICS (FY21 USD)

DDT&E

$13B Airframe

$5.2B Engine

TFU

$191M Airframe

$23M Engine

ENVIRONMENTAL METRICS

94 EPNdB
Lateral Takeoff Noise

107 PNLdB
Sonic Boom

0 kg/km/pax
Emissions (CO_2e)

0.09 kg/km/pax
Fuel Consumption Rate

AIRCRAFT NOTES

- Supersonic cruise condition L/D = 6.7
- Supersonic cruise condition Isp = 7200 s
- Vehicle propellant mass fraction (PMF) = 0.47
- Takeoff T/W = 0.375
- Effective Dose Rate (51° Lat.) = 9.0 μSv/hr

NASA SBIR Contract #80NSSC22C0008

LH2 Matrix – Aircraft 17

ID: LH2.M2.P50.R6100.20230518

Key Inputs

Mach 2
Cruise Speed

6,100 nmi
Range

50
Passenger Count

LH2
Fuel Type

OPERATOR METRICS

$18,600-$24,300
Ticket Price

0.0M
Pax/Year

0
Routes Captured

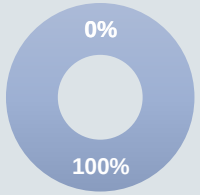

MANUFACTURER METRICS

$633M
Aircraft Price

$459M
Airframe Price

$44M x4
Engine Price

18
Aircraft Sold

KEY EVENTS & DATES

OPERATOR
ENGINE MANUFACTURER
AIRFRAME MANUFACTURER

Business Results

BUSINESS CASE ANALYSIS

BUSINESS CASE SOLUTION DID NOT CLOSE

NASA SBIR Contract #80NSSC22C0008

LH2 Matrix – Aircraft 18

ID: LH2.M3.P50.R5700.20230518

Mach 3
Cruise Speed

5,700 nmi
Max Range

50
Passenger Count

LH2
Fuel Type

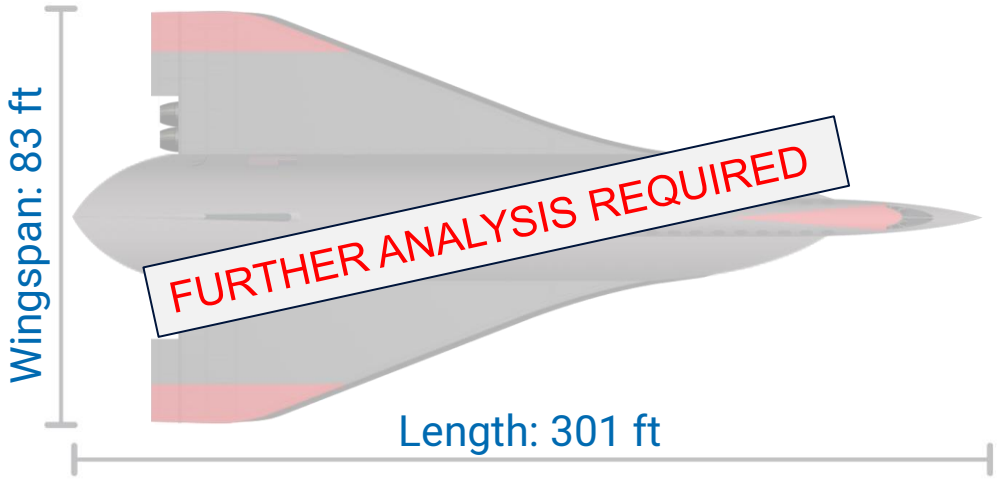

COST METRICS (FY21 USD)

DDT&E

$22B	$8.6B
Airframe	Engine

TFU

$368M	$65M
Airframe	Engine

ENVIRONMENTAL METRICS

98 EPNdB
Lateral Takeoff Noise

107 PNLdB
Sonic Boom

0 kg/km/pax
Emissions (CO_2e)

0.23 kg/km/pax
Fuel Consumption Rate

655,000 lbm MTOW	**368,500 lbm** MEW	**4 x 61,400 lbf** Engine Thrust SLS
4.1 hours Gate-to-Gate Time at Max Range	**73,300 ft** Cruise Altitude	**10,200 ft** Bal. Field Length SL

AIRCRAFT NOTES

- Supersonic cruise condition L/D = 5.3
- Supersonic cruise condition Isp = 4799 s
- Vehicle propellant mass fraction (PMF) = 0.47
- Takeoff T/W = 0.375
- Effective Dose Rate (51° Lat.) = 9.1 μSv/hr

NASA SBIR Contract #80NSSC22C0008

LH2 Matrix – Aircraft 18

ID: LH2.M3.P50.R5700.20230518

Key Inputs

Mach 3
Cruise Speed

5,700 nmi
Range

50
Passenger Count

LH2
Fuel Type

OPERATOR METRICS

$18,600-$23,800
Ticket Price

0.0M
Pax/Year

0
Routes Captured

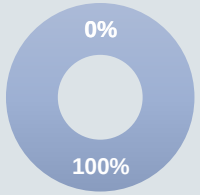

MANUFACTURER METRICS

$1.5B
Aircraft Price

$1.0B
Airframe Price

$125M x4
Engine Price

14
Aircraft Sold

KEY EVENTS & DATES

OPERATOR
ENGINE MANUFACTURER
AIRFRAME MANUFACTURER

Business Results

BUSINESS CASE ANALYSIS

BUSINESS CASE SOLUTION DID NOT CLOSE

NASA SBIR Contract #80NSSC22C0008

LH2 Matrix – Aircraft 19

ID: LH2.M4.P50.R5400.20230518

Mach 4
Cruise Speed

5,400 nmi
Max Range

50
Passenger Count

LH2
Fuel Type

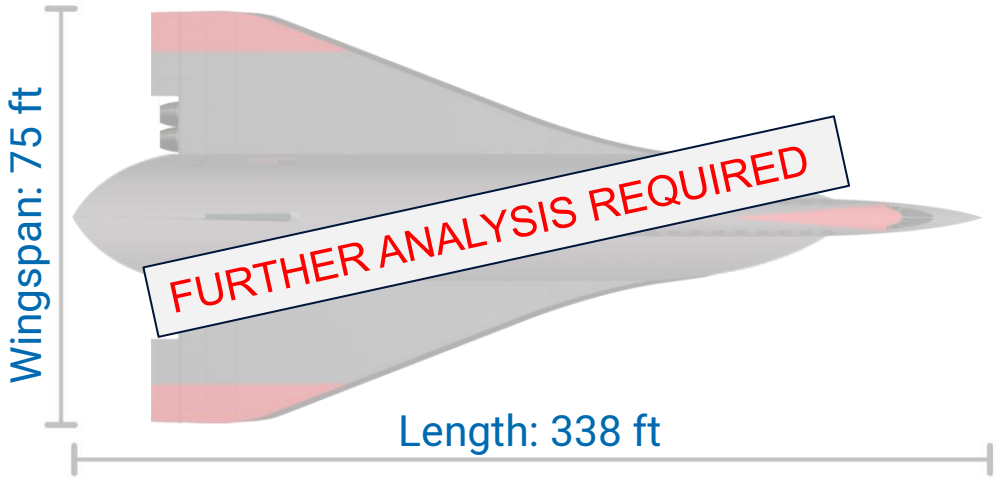

COST METRICS (FY21 USD)

DDT&E

$25B Airframe

$11B Engine

TFU

$428M Airframe

$101M Engine

ENVIRONMENTAL METRICS

99 EPNdB
Lateral Takeoff Noise

106 PNLdB
Sonic Boom

0 kg/km/pax
Emissions (CO_2e)

0.29 kg/km/pax
Fuel Consumption Rate

777,000 lbm
MTOW

441,300 lbm
MEW

4 x 72,800 lbf
Engine Thrust SLS

3.1 hours
Gate-to-Gate Time
at Max Range

85,500 ft
Cruise Altitude

12,500 ft
Bal. Field Length SL

AIRCRAFT NOTES

- Supersonic cruise condition L/D = 4.7
- Supersonic cruise condition Isp = 3839 s
- Vehicle propellant mass fraction (PMF) = 0.47
- Takeoff T/W = 0.375
- Effective Dose Rate (51° Lat.) = 8.5 μSv/hr

NASA SBIR Contract #80NSSC22C0008

LH2 Matrix – Aircraft 19

ID: LH2.M4.P50.R5400.20230518

Key Inputs

Mach 4
Cruise Speed

5,400 nmi
Range

50
Passenger Count

LH2
Fuel Type

OPERATOR METRICS

$18,600-$23,300
Ticket Price

0.0M
Pax/Year

0
Routes Captured

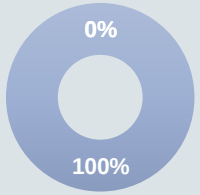

MANUFACTURER METRICS

$2.1B
Aircraft Price

$1.3B
Airframe Price

$194M x4
Engine Price

13
Aircraft Sold

KEY EVENTS & DATES

OPERATOR
ENGINE MANUFACTURER
AIRFRAME MANUFACTURER

Business Results

BUSINESS CASE ANALYSIS

BUSINESS CASE SOLUTION DID NOT CLOSE

NASA SBIR Contract #80NSSC22C0008

LH2 Matrix – Aircraft 20

ID: LH2.M5.P50.R5000.20230518

Mach 5
Cruise Speed

5,000 nmi
Max Range

50
Passenger Count

LH2
Fuel Type

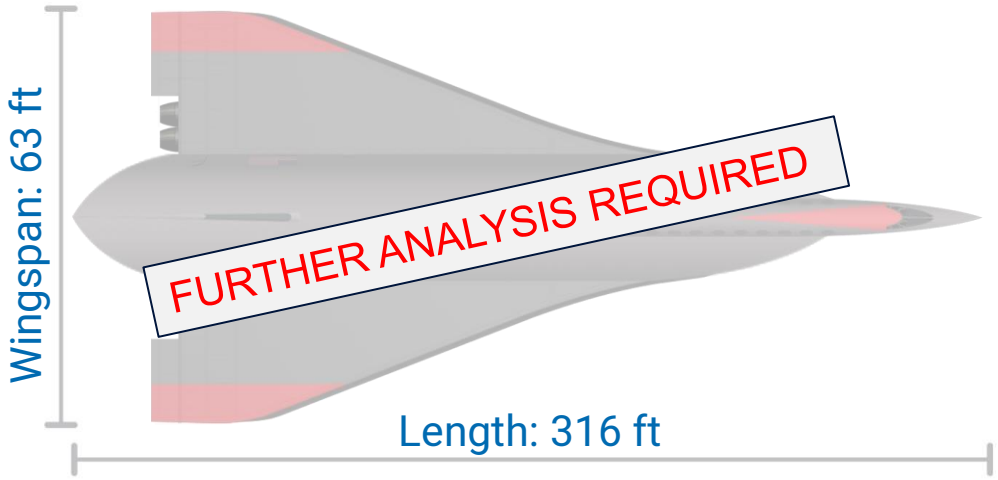

COST METRICS (FY21 USD)

DDT&E

$24B Airframe

$12B Engine

TFU

$398M Airframe

$117M Engine

ENVIRONMENTAL METRICS

99 EPNdB
Lateral Takeoff Noise

105 PNLdB
Sonic Boom

0 kg/km/pax
Emissions (CO_2e)

0.28 kg/km/pax
Fuel Consumption Rate

718,000 lbm
MTOW

417,200 lbm
MEW

4 x 67,300 lbf
Engine Thrust SLS

2.4 hours
Gate-to-Gate Time
at Max Range

95,100 ft
Cruise Altitude

15,200 ft
Bal. Field Length SL

AIRCRAFT NOTES

- Supersonic cruise condition L/D = 4.3
- Supersonic cruise condition Isp = 3118 s
- Vehicle propellant mass fraction (PMF) = 0.47
- Takeoff T/W = 0.375
- Effective Dose Rate (51° Lat.) = 8.1 μSv/hr

NASA SBIR Contract #80NSSC22C0008

Preliminary results, subject to change

LH2 Matrix – Aircraft 20

SpaceWorks

NASA

ID: LH2.M5.P50.R5000.20230518

Key Inputs

Mach 5
Cruise Speed

5,000 nmi
Range

50
Passenger Count

LH2
Fuel Type

OPERATOR METRICS

$17,200-$21,000
Ticket Price

0.0M
Pax/Year

2
Routes Captured

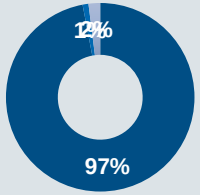

MANUFACTURER METRICS

$6.1B
Aircraft Price

$4.5B
Airframe Price

$410M x4
Engine Price

23
Aircraft Sold

KEY EVENTS & DATES

OPERATOR

ENGINE MANUFACTURER

AIRFRAME MANUFACTURER

Business Results

BUSINESS CASE ANALYSIS

BUSINESS CASE SOLUTION DID NOT CLOSE

NASA SBIR Contract #80NSSC22C0008

SpaceWorks®

SPACE & FLIGHT SOLUTIONS FOR THE

NEXT GENERATION

www.spaceworks.aero

REPORT DOCUMENTATION PAGE

1. REPORT DATE	2. REPORT TYPE	3. DATES COVERED	
		START DATE	END DATE
7/31/2023	Final Report	12/22/2021	7/31/2023

4. TITLE AND SUBTITLE

Lifecycle Cost Modeling of High-Speed Commercial Aircraft : Expanded Trade Studies and Modeling

5a. CONTRACT NUMBER	5b. GRANT NUMBER	5c. PROGRAM ELEMENT NUMBER
80NSSC22C0008		
5d. PROJECT NUMBER	**5e. TASK NUMBER**	**5f. WORK UNIT NUMBER**

6. AUTHOR(S)

Hayden Magill, Aaron Boysen, Ami Patel, John Olds

7. PERFORMING ORGANIZATION NAME(S) AND ADDRESS(ES)

SpaceWorks Enterprises, Inc.
3980 Dekalb Technology Pkwy, Suite 760
Atlanta, GA 30340

8. PERFORMING ORGANIZATION REPORT NUMBER

9. SPONSORING/MONITORING AGENCY NAME(S) AND ADDRESS(ES)	10. SPONSOR/MONITOR'S ACRONYM(S)	11. SPONSOR/MONITOR'S REPORT NUMBER(S)

12. DISTRIBUTION/AVAILABILITY STATEMENT

13. SUPPLEMENTARY NOTES

14. ABSTRACT

This effort aimed to evaluate the economic potential of high-speed commercial aircraft operating at speeds between Mach 1.5-5, ranges of 3,000-7,000 nmi, and aircraft capacity of 20 and 50 passengers. Expanded trade studies were conducted to assess the economics of Mach 1.5 aircraft, utilization of tech stops to extend aircraft range, demand-based mixed fleet solutions (two aircraft types), competitive operator analysis (two operators), and update market data and evaluate economic impact on alternative fuel aircraft. Advanced modeling capabilities, including incorporation of flight scheduling, were further developed to provide higher fidelity modeling of high-speed aircraft development, production, operations, and market capture.

15. SUBJECT TERMS

Supersonic, hypersonic, high-speed aircraft, point-to-point (PTP), commercial, market, economic, Concorde, Boom, alternative fuel, DES modeling

16. SECURITY CLASSIFICATION OF:			17. LIMITATION OF ABSTRACT	18. NUMBER OF PAGES
a. REPORT	b. ABSTRACT	C. THIS PAGE		
Unclassified	Unclassified	Unclassified		42

19a. NAME OF RESPONSIBLE PERSON	19b. PHONE NUMBER *(Include area code)*
John Bradford	770-379-8000

PREVIOUS EDITION IS OBSOLETE.

STANDARD FORM 298 (REV. 5/2020)
Prescribed by ANSI Std. Z39.18

INSTRUCTIONS FOR COMPLETING SF 298

1. REPORT DATE.
Full publication date, including day, month, if available. Must cite at least the year and be Year 2000 compliant, e.g. 30-06-1998; xx-06-1998; xx-xx-1998.

2. REPORT TYPE.
State the type of report, such as final, technical, interim, memorandum, master's thesis, progress, quarterly, research, special, group study, etc.

3. DATES COVERED.
Indicate the time during which the work was performed and the report was written.

4. TITLE.
Enter title and subtitle with volume number and part number, if applicable. On classified documents, enter the title classification in parentheses.

5a. CONTRACT NUMBER.
Enter all contract numbers as they appear in the report, e.g. F33615-86-C-5169.

5b. GRANT NUMBER.
Enter all grant numbers as they appear in the report, e.g. AFOSR-82-1234.

5c. PROGRAM ELEMENT NUMBER.
Enter all program element numbers as they appear in the report, e.g. 61101A.

5d. PROJECT NUMBER.
Enter all project numbers as they appear in the report, e.g. 1F665702D1257; ILIR.

5e. TASK NUMBER. Enter all task numbers as they appear in the report, e.g. 05; RF0330201; T4112.

5f. WORK UNIT NUMBER.
Enter all work unit numbers as they appear in the report, e.g. 001; AFAPL30480105.

6. AUTHOR(S). Enter name(s) of person(s) responsible for writing the report, performing the research, or credited with the content of the report. The form of entry is the last name, first name, middle initial, and additional qualifiers separated by commas, e.g. Smith, Richard, J, Jr.

7. PERFORMING ORGANIZATION NAME(S) AND ADDRESS(ES). Self-explanatory.

8. PERFORMING ORGANIZATION REPORT NUMBER.
Enter all unique alphanumeric report numbers assigned by the performing organization, e.g. BRL-1234; AFWL-TR-85-4017-Vol-21-PT-2.

9. SPONSORING/MONITORING AGENCY NAME(S) AND ADDRESS(ES). Enter the name and address of the organization(s) financially responsible for and monitoring the work.

10. SPONSOR/MONITOR'S ACRONYM(S). Enter, if available, e.g. BRL, ARDEC, NADC.

11. SPONSOR/MONITOR'S REPORT NUMBER(S). Enter report number as assigned by the sponsoring/monitoring agency, if available, e.g. BRL-TR-829; -215.

12. DISTRIBUTION/AVAILABILITY STATEMENT. Use agency-mandated availability statements to indicate the public availability or distribution limitations of the report. If additional limitations/ restrictions or special markings are indicated, follow agency authorization procedures, e.g. RD/ FRD, PROPIN, ITAR, etc. Include copyright information.

13. SUPPLEMENTARY NOTES. Enter information not included elsewhere such as: prepared in cooperation with; translation of; report supersedes; old edition number, etc.

14. ABSTRACT. A brief (approximately 200 words) factual summary of the most significant information.

15. SUBJECT TERMS. Key words or phrases identifying major concepts in the report.

16. SECURITY CLASSIFICATION. Enter security classification in accordance with security classification regulations, e.g. U, C, S, etc. If this form contains classified information, stamp classification level on the top and bottom of this page.

17. LIMITATION OF ABSTRACT. This block must be completed to assign a distribution limitation to the abstract. Enter UU (Unclassified Unlimited) or SAR (Same as Report). An entry in this block is necessary if the abstract is to be limited.

PREVIOUS EDITION IS OBSOLETE.